CITY OF RIDGECREST

WEST RIDGECREST BOULEVARD RECONSTRUCTION PROJECT NORTH MAHAN STREET TO CHINA LAKE BLVD (STATE ROUTE 178) PROJECT NO. ST0101

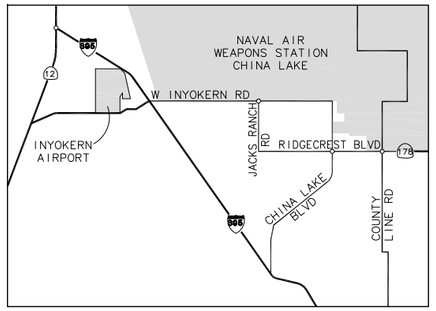

VICINITY MAP

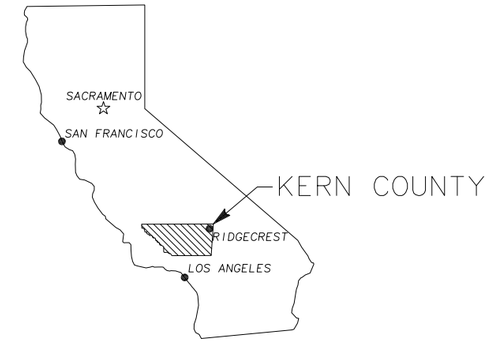

NOT TO SCALE

ENGINEER OF RECORD: _____ DATE
EDGAR A. NORIEGA R.C.E. 61555
ENGINEER OF RECORD

REVIEWED BY: _____ DATE
LOREN E. CULP, R.C.E. 34524
CITY ENGINEER

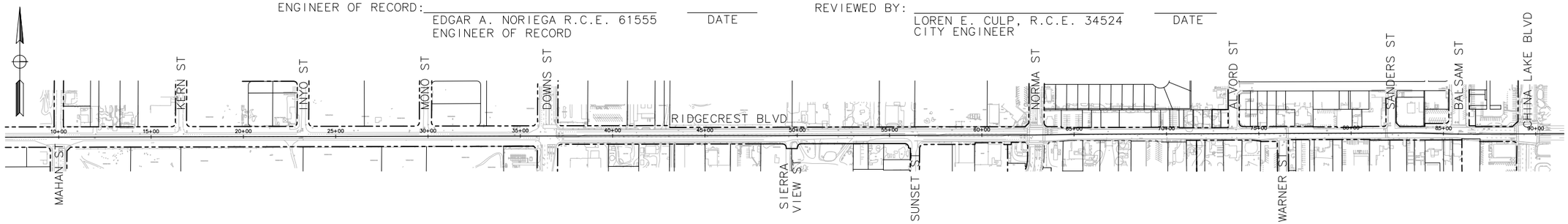

LOCATION MAP
SCALE: 1"=300'

ABBREVIATIONS

AB	AGGREGATE BASE
Abn	ABANDON
AC	ASPHALT CONCRETE
AP	ANGLE POINT
APPROX	APPROXIMATE
ACP	ASBESTOS CONCRETE PIPE
BC	BEGIN CURVE
Beg	BEGIN
BLDG	BUILDING
BLVD	BOULEVARD
BOC	BACK OF CURB
BOW	BACK OF WALK
BR	BOTTOM OF RAMP
BS	BOTTOM OF STAIRS
BVC	BEGIN VERTICAL CURVE
C	CONFORM
C&G	CURB & GUTTER
C,G,&SW	CURB, GUTTER, & SIDEWALK
CL	CENTERLINE/CLASS
CLR	CLEAR
CMP	CORRUGATED METAL PIPE
CONC	CONCRETE
CONT	CONTINUOUS
COR	CITY OF RIDGECREST
CSG	COMPACTED SUB-GRADE
CT	COURT
CTS	CEMENT TREATED SUB-BASE
D, DIAM	DIAMETER
DI	DRAINAGE INLET
DR	DRIVE
DWY	DRIVEWAY
E	EAST
EB	EASTBOUND
EC	END CURVE
EL	ELEVATION
ELEC	ELECTRICAL
EP	EDGE OF PAVEMENT
ETW	EDGE OF TRAVEL WAY
EVC	END VERTICAL CURVE
(E)	EXISTING
FDR	FULL DEPTH REHABILITATION
FES	FLARED END SECTION
FG	FINISH GRADE
FH	FIRE HYDRANT
FL	FLOW LINE
FOC	FACE OF CURB
G	GAS
GB	GRADE BREAK
GR	GROUND
H	HEIGHT
HP	HINGE POINT/HIGH POINT
INF	INFINITE
INT	INTERSECTION
INV	INVERT
IWVWD	INDIAN WELLS VALLEY WATER DISTRICT
LCF	LEFT MEDIAN CURB FACE
LF	LINEAR FEET
LIP	LIP OF GUTTER
L/PE	LANDSCAPE/PEDESTRIAN EASEMENT
LN	LANE
LP	LOW-POINT
Lt	LEFT
MAX	MAXIMUM
MH	MANHOLE
MIN	MINIMUM
MOD	MODIFIED
(N)	NEW
N	NORTH
NB	NORTHBOUND
NO.	NUMBER
NTS	NOT TO SCALE
O.C.	ON CENTER
OD	OUTSIDE DIAMETER
OG	ORIGINAL GROUND
P	PAVEMENT
PCC	PORTLAND CEMENT CONCRETE
PG	PROFILE GRADE
PI	POINT OF INTERSECTION
PL	PROPERTY LINE
PRC	POINT OF REVERSING CURVE
(P)	PROPOSED
PT	POINT OF TANGENCY
PUE	PUBLIC UTILITY EASEMENT
PVI	POINT VERTICAL INTERSECTION
PVMT	PAVEMENT
R	RADIUS
RCB	REINFORCED CONCRETE BOX
RCF	RIGHT MEDIAN CURB FACE
RCP	REINFORCED CONCRETE PIPE
RD	ROAD
RSP	ROCK SLOPE PROTECTION
Rt	RIGHT
R/W	RIGHT OF WAY
S	SOUTH / SLOPE
SB	SOUTHBOUND
SCE	SOUTHERN CALIFORNIA EDISON
SSCO	SANITARY SEWER CLEAN OUT
SD	STORM DRAIN
SDMH	STORM DRAIN MANHOLE
SS	SANITARY SEWER
SSMH	SANITARY SEWER MANHOLE
ST	STREET
STA	STATION
STD	STANDARD
SW	SIDEWALK
TBC	TOP BACK OF CURB
TBW	TOP BACK OF WALK
TC	TOP OF CURB
TCE	TEMPORARY CONSTRUCTION EASEMENT
TFC	TOP FACE OF CURB
TR	TOP OF RAMP
TRANS	TRANSITION
TS	TOP OF STAIRS
TYP	TYPICAL
V	VERTICAL
VAR	VARIES
VC	VERTICAL CURVE
VG	VALLEY GUTTER
VGFL	VALLEY GUTTER FLOW LINE
W	WEST/WATER
WB	WESTBOUND
WPJ	WEAKENED PLANE JOINT
WV	WATER VALVE
WY	WAY

CONVENTIONAL SYMBOLS

CENTERLINE	ANGLE POINT
TOPO LINES	POINT ON CURVE
R/W LINE	PULLBOX
PROPERTY LINE	WATER VALVE
PUE	SPRINKLER
FILL LINE	HYDRANT
CUT LINE	TREE
EDGE OF PAVEMENT	UTILITY POLE
GRADE BREAK	ANCHOR POLE
FLOW LINE	GUY ANCHOR
SAWCUT LINE	LIGHT STANDARD
GRIND LINE	GAS VALVE
EXIST FENCE	DRAINAGE INLET
EXIST SD	MANHOLE
PROPOSED SD	DITCH FL
EXIST SEWER	
PROPOSED SEWER	
EXIST TELEPHONE	
EXIST WATER	
PROPOSED WATER	
EXIST ELECTRICITY	
EXIST GAS	
EXIST MANHOLE	
PROPOSED MANHOLE	
DETAIL NUMBER / DETAIL SHEET	3 / D-1

SHEET INDEX

SHEET	DRAWING	DESCRIPTION
1	T-1	TITLE SHEET
2 TO 3	G-1 TO G-2	GENERAL NOTES
4	S-1	SURVEY CONTROL DIAGRAM
5 TO 9	X-1 TO X-5	TYPICAL CROSS SECTIONS
10 TO 18	D-1 TO D-9	ROADWAY DETAILS
19 TO 26	L-1 TO L-8	LAYOUTS
27 TO 41	CD-1 TO CD-15	CONSTRUCTION DETAILS
42 TO 48	U-1 TO U-7	UTILITIES
49 TO 50	SC-1 TO SC-2	STAGE CONSTRUCTION
51 TO 60	TH-1 TO TH-10	TRAFFIC HANDLING
61	THQ-1	TRAFFIC HANDLING QUANTITIES
62 TO 65	SS-1 TO SS-4	SIGNING AND STRIPING
66	PDQ-1	PAVEMENT DELINEATION QUANTITIES
67 TO 69	Q-1 TO Q-3	QUANTITIES
70 TO 82	E-1 TO E-13	ELECTRICAL PLANS
83	PL-1	PLANT LIST
84 TO 85	PP-1 TO PP-2	PLANTING PLAN
86 TO 87	IP-1 TO IP-2	IRRIGATION PLAN
88 TO 90	LD-1 TO LD-3	LANDSCAPE DETAIL

SHELF-READY PLANS - NOT FOR CONSTRUCTION

Project No.	
ST0101	CITY OF RIDGECREST W. RIDGECREST BOULEVARD RECONSTRUCTION PROJECT TITLE SHEET

REGISTERED PROFESSIONAL ENGINEER — EDGAR A. NORIEGA — No. 61555 — Exp. 6/30/13 — CIVIL — STATE OF CALIFORNIA

MARK THOMAS & COMPANY, INC.
7571 N REMINGTON AVENUE, SUITE 102
FRESNO, CALIFORNIA 93720
(559) 447-1938 FAX: (559) 447-8586
WWW.MARKTHOMAS.COM
MTCO JOB NUMBER: FN-09105

DATE: 11/18/2011
SCALE:
DRAWN BY: KS/MB/JL
CK'D BY: GC
DATE CK'D:

Revisions	Checked By	Date Checked

SHEET NO. 1

T-1

OF 90 SHEETS

CAD USER: ksmith
PLOT DATE: Jan 31, 2012-03:15:31pm
FILE NAME: RCB_T-1
PATH: V:\Ridgecrest - FN-09105 - Ridgecrest Blvd\CADD\Drawing\

GENERAL NOTES:

1. ALL CONSTRUCTION AND MATERIALS SHALL BE IN ACCORDANCE WITH THE CITY OF RIDGECREST STANDARD CONSTRUCTION SPECIFICATIONS AND IMPROVEMENT STANDARDS. WHERE INCONSISTENCIES EXIST, THE LATEST EDITION SHALL TAKE PRECEDENCE.
2. PUBLIC SAFETY AND TRAFFIC CONTROL SHALL BE PROVIDED IN ACCORDANCE WITH SECTION 6 – SECTION 12 OF THE CALTRANS STANDARD SPECIFICATIONS 2006. SAFE VEHICULAR AND PEDESTRIAN ACCESS SHALL BE PROVIDED AT ALL TIMES DURING CONSTRUCTION.
3. THE CONTRACTOR SHALL NOTIFY THE CITY OF RIDGECREST CONSTRUCTION INSPECTION OFFICE 72 HOURS PRIOR TO THE COMMENCEMENT OF WORK. THE CONTRACTOR SHALL NOT START ANY GRADING UNTIL THE CITY COMPLETES A PRE-CONSTRUCTION MEETING. PLEASE CALL LOREN CULP AT (760)499-5082 TO SCHEDULE A PRE-CONSTRUCTION MEETING.
4. THE CITY OF RIDGECREST IS A MEMBER OF THE UNDERGROUND SERVICE ALERT (U.S.A.) ONE-CALL PROGRAM. THE CONTRACTOR AND ANY SUB-CONTRACTOR FOR THIS CONTRACT SHALL NOTIFY MEMBERS OF U.S.A. TWO WORKING DAYS IN ADVANCE OF PERFORMING ANY EXCAVATION WORK BY CALLING THE TOLL-FREE NUMBER: 1-800-227-2600.
5. THE CONTRACTOR SHALL BE RESPONSIBLE FOR THE PROTECTION OF ALL EXISTING SURVEY MONUMENTS AND OTHER SURVEY MARKERS DURING CONSTRUCTION. ALL SUCH MONUMENTS OR MARKERS DESTROYED DURING CONSTRUCTION SHALL BE REPLACED AT THE CONTRACTOR'S EXPENSE.
6. SIDEWALK RAMPS AND DRIVEWAYS SHALL CONFORM TO THE CITY OF RIDGECREST STANDARDS UNLESS OTHERWISE SHOWN ON PLAN SET.
7. THE TYPES, LOCATIONS, SIZES AND DEPTHS OF EXISTING UNDERGROUND UTILITIES SHOWN ON THESE PLANS WERE OBTAINED FROM SOURCES OF VARYING RELIABILITY. THE CONTRACTOR IS CAUTIONED THAT ONLY ACTUAL EXCAVATION WILL REVEAL THE TYPES, EXTENT, SIZES, LOCATIONS AND DEPTHS OF SUCH UNDERGROUND UTILITIES. THE CITY OF RIDGECREST NOR IT'S CONSULTANT, MARK THOMAS & COMPANY INC., CAN ASSUME THE RESPONSIBILITY FOR THE COMPLETENESS OR ACCURACY OF THE DELINEATION OF SUCH UTILITIES NOR THE EXISTENCE OF OTHER BURIED OBJECTS OF SUCH UNDERGROUND UTILITIES WHICH MAY BE ENCOUNTERED BUT WHICH ARE NOT SHOWN ON THESE PLANS.

SIGNING AND STRIPING NOTES:

1. SIGNING AND STRIPING NOTES REFER TO THE LATEST VERSION OF THE STATE STANDARD SPECIFICATIONS, WHICH REFERENCE CALTRANS STANDARD PLANS, AND TRAFFIC MANUAL. ANY REFERENCES REGARDING THE TRAFFIC CONTROL DEVICE TOPICS IN THE TRAFFIC MANUAL ARE SUPERSEDED AND REPLACED BY THE FEDERAL MANUAL ON UNIFORM TRAFFIC CONTROL DEVICES (MUTCD) 2003 EDITION AS AMENDED BY THE MUTCD 2003 CALIFORNIA SUPPLEMENT. ALL SIGNING AND STRIPING WORK SHALL COMPLY WITH THESE STANDARDS.
2. THE CONTRACTOR SHALL BE RESPONSIBLE FOR ADDITIONAL SIGNING AND STRIPING, AS DETERMINED BY THE CITY OF RIDGECREST FOR PUBLIC SAFETY.
3. ALL EXISTING SIGNING THAT CONFLICTS WITH PROPOSED SIGNING SHALL BE REMOVED.
4. ALL SIGNS SHALL BE MUTCD STANDARD SIZE UNLESS OTHERWISE NOTED.
5. ALL PARKING RESTRICTION SIGNS SHALL HAVE ENGINEERING GRADE REFLECTIVE SHEETING. ALL OTHER SIGNS SHALL HAVE DIAMOND GRADE CUBED REFLECTIVE SHEETINGS.
6. NEW SIGNS SHALL BE INSTALLED ON STREET LIGHT POLES OR 2" DIAMETER TUBULAR GALVANIZED STEEL POSTS WITH VANDAL-RESISTANT HARDWARE. THE POSTS SHALL BE SET IN CONCRETE. ONE OR MORE SIGN PANELS MOUNTED ON A SINGLE SIGN POST OR STREET LIGHT POLE SHALL BE COUNTED AND PAID FOR AS ONE ROADSIDE SIGN INSTALLATION UNLESS OTHERWISE NOTED.
7. SIGNS SHALL BE MOUNTED SO THAT THE BOTTOM OF THE SIGN IS AT LEAST SEVEN FEET FROM THE FINISHED GRADE IN AREAS WHERE PEDESTRIANS MAY BE PRESENT, EVEN IF THERE IS NO SIDEWALK. TO SATISFY THIS REQUIREMENT, EXISTING POSTS MAY HAVE TO BE REPLACED IF ADDITIONAL SIGNS ARE ADDED.
8. WHERE POSSIBLE, AT LEAST TWO FEET OF CLEARANCE SHOULD BE PROVIDED FROM CURB FACE TO EDGE OF SIGN, HOWEVER THIS IS NOT TO ENCROACH INTO AN ADA PATH. A CLEAR WIDTH OF 36" MUST BE MAINTAINED AROUND ALL SIGN POSTS.
9. ALL PERMANENT STRIPING AND PAVEMENT MARKINGS SHALL BE THERMOPLASTIC EXCEPT BIKE LANE LEGENDS, BIKE LANE ARROWS, AND BIKE LANE DETECTORS WILL BE TWO COATS WHITE PAINT OR AS OTHERWISE NOTED. YELLOW THERMOPLASTIC SHALL BE LEAD-FREE ORGANIC MATERIAL. CURB MARKINGS SHALL BE PAINT.
10. ALL STRIPING AND MARKINGS SHALL BE REFLECTORIZED UNLESS OTHERWISE DIRECTED.
11. ALL EXISTING STRIPING AND MARKINGS THAT CONFLICT WITH PROPOSED STRIPING AND MARKINGS SHALL BE REMOVED BY OR GRINDING. PAVEMENT LEGENDS AND ARROWS THAT ARE REMOVED SHALL BE REMOVED IN A BLOCK PATTERN. ALL STRIPING AND MARKING REMOVAL AREAS SHALL BE TREATED WITH AN APPROVED PAVEMENT SEALER.
12. ALL MEDIAN ISLAND NOSE CURB FACES FROM BC (BEGIN CURVE) TO EC (END CURVE) SHALL BE PAINTED WITH 2-COATS YELLOW REFLECTIVE PAINT. TYPE K-1 ONE-WAY YELLOW REFLECTIVE PAVEMENT MARKERS SHALL ALSO BE INSTALLED ON TOP OF ALL MEDIAN ISLAND NOSE CURBS AND POSITIONED TO FACE ON-COMING TRAFFIC.
13. BLUE TWO-WAY REFLECTIVE PAVEMENT MARKERS SHALL BE PLACED 6" OFF OF PROPOSED CENTERLINE ACROSS FROM ALL FIRE HYDRANTS.

EROSION AND SEDIMENT CONTROL NOTES:

1. ALL DRAINAGE INLETS IMMEDIATELY DOWNSTREAM OF THE WORK AREAS AND WITHIN THE WORK AREAS, EXISTING AND PROPOSED, SHALL BE PROTECTED WITH SEDIMENT CONTROL AND INLET FILTER BAGS, YEAR ROUND. INLET FILTER BAGS SHALL BE REMOVED FROM THE DRAINAGE INLETS UPON ACCEPTANCE OF THE PUBLIC IMPROVEMENTS BY THE CITY.
2. WHERE CONSTRUCTION TRAFFIC ENTERS OR LEAVES PAVED AREAS, THE STABILIZED ACCESS SHALL BE MAINTAINED ON A YEAR ROUND BASIS UNTIL THE COMPLETION OF CONSTRUCTION.
3. ALL AREAS DISTURBED DURING CONSTRUCTION, BY GRADING, TRENCHING, OR OTHER ACTIVITIES, SHALL BE PROTECTED FROM EROSION AS DIRECTED BY THE MOST RECENT CONSTRUCTION GENERAL PERMIT REQUIREMENTS.
4. SENSITIVE AREAS AND AREAS WHERE EXISTING VEGETATION IS BEING PRESERVED SHALL BE PROTECTED WITH TEMPORARY FENCING (TYPE ESA). SEDIMENT CONTROL BMPS SHALL BE INSTALLED WHERE ACTIVE CONSTRUCTION AREAS DRAIN INTO SENSITIVE OR PRESERVED VEGETATION AREAS.
5. SEDIMENT CONTROL BMPS SHALL BE PLACED ALONG THE PROJECT PERIMETER WHERE DRAINAGE LEAVES THE PROJECT. SEDIMENT CONTROL BMPS SHALL BE MAINTAINED YEAR ROUND UNTIL THE CONSTRUCTION IS COMPLETE OR THE DRAINAGE PATTERN HAS BEEN CHANGED AND NO LONGER LEAVES THE SITE.
6. EROSION AND SEDIMENT CONTROL MEASURES FOR THIS PROJECT SHALL BE IN COMPLIANCE AT ALL TIMES WITH THE STORMWATER POLLUTION PREVENTION PLAN (SWPPP) PREPARED FOR THE PROJECT IN ACCORDANCE WITH THE STATE OF CALIFORNIA GENERAL CONSTRUCTION PERMIT.
7. BMPS TO BE IN PLACE AND INSPECTED PRIOR TO GROUND BREAKING.

SUPPLEMENTAL NOTES:

1. CONTRACTOR SHALL PROVIDE DRIVEWAY ACCESS AT ALL TIMES DURING CONSTRUCTION.
2. THE CITY OF RIDGECREST HAS REVIEWED THESE PLANS FOR COMPLIANCE TO THE CITY DESIGN AND CONSTRUCTION STANDARDS ONLY. THE ENGINEER OF RECORD IS RESPONSIBLE FOR THE CONSTRUCTABILITY AND ANY ERRORS IN THE PLAN EITHER OF COMMISSION OR OMISSION AS PROVIDED FOR BY CALIFORNIA LAW. SUCH ERRORS OR CONSTRUCTABILITY ISSUES, WHEN BROUGHT TO THE ATTENTION OF THE ENGINEER OF RECORD BY THE CONTRACTOR OR THE CITY SHALL PROMPTLY REMEDY SUCH ERRORS OR CONSTRUCTABLITY ISSUES.

GRADING NOTES:

1. CONTRACTOR TO VERIFY EXISTING DOORWAY GRADES, AS SHOWN ON CD-SHEETS, AND REPORT ANY DISCREPANCIES TO THE ENGINEER.
2. GRADING OPERATIONS, ROADWAY EXCAVATION, AND EMBANKMENT CONSTRUCTION SHALL BE CONDUCTED BY THE CONTRACTOR IN A MANNER TO PROVIDE A REASONABLY SATISFACTORY SURFACE FOR TRAFFIC. WHEN ROUGH GRADING IS COMPLETED, THE ROADBED SURFACE SHALL BE BROUGHT TO A SMOOTH EVEN CONDITION SATISFACTORY FOR TRAFFIC.
3. SURFACE COMPACTION AND FINISH GRADING SHALL PROCEED IN SUCH A MANNER AS TO PRODUCE, IN NOT MORE THAN 2 HOURS FROM INITIAL COMPACTION, A SMOOTH, CLOSELY KNIT SURFACE CONFORMING TO THE CROWN, GRADE AND LINE INDICATED AND WILL BE FREE OF CRACKS, RIDGES OR LOOSE MATERIAL.
4. MAINTAIN MOISTURE CONTENT ON SURFACE WITHIN ALLOWABLE RANGE DURING ALL GRADING PROCEDURES.
5. ALL EXCESS MATERIAL ABOVE THE GRADE TOLERANCE SPECIFIED BY THE PLANS SHOULD BE REMOVED FROM THE GRADE PRIOR TO FINAL SURFACE COMPACTION OF THE FDR SECTION. THIS EXCESS MATERIAL CAN BE USED IN AREAS INACCESSIBLE TO TREATMENT EQUIPMENT, PROVIDED THE CEMENT BASE MATERIAL IS USED WITHIN THE ALLOTTED TIME CONSTRAINTS.
6. THE TRIMMED AND COMPLETED SURFACE SHALL BE ROLLED WITH STEEL OR PNEUMATIC TIRED ROLLERS. MINOR INDENTATIONS MAY REMAIN IN THE SURFACE OF THE FINISHED MATERIAL AS LONG AS NO LOOSE MATERIAL REMAINS IN THE INDENTATIONS.

UTILITY RELOCATION NOTES:

1. CONTRACTOR TO COORDINATE UTILITY RELOCATION DURING CONSTRUCTION WITH THE CONTACTS SHOWN ON SHEET G-2.

TRAFFIC CONTROL NOTES:

1. SEE SHEET TH-1 FOR TRAFFIC HANDLING GENERAL NOTES.

SOIL TREATMENT NOTES:

1. SEE THE SPECIAL PROVISIONS FOR ON SOIL PREPARATION REQUIREMENTS FOR THE FDR SECTION.

SHELF-READY PLANS - NOT FOR CONSTRUCTION

Project No.							
ST0101	CITY OF RIDGECREST W. RIDGECREST BOULEVARD RECONSTRUCTION PROJECT GENERAL NOTES	REGISTERED PROFESSIONAL ENGINEER EDGAR A. NORIEGA No. 61555 Exp. 6/30/13 CIVIL STATE OF CALIFORNIA	MARK THOMAS & COMPANY, INC. 7571 N REMINGTON AVENUE, SUITE 102 FRESNO, CALIFORNIA 93720 (559) 447-1938 FAX: (559) 447-8586 WWW.MARKTHOMAS.COM MTCO JOB NUMBER: FN-09105	DATE: 11/18/2011 SCALE: DRAWN BY: KS/MB/JL CK'D BY: CG DATE CK'D:	Revisions	Checked By	Date Checked	SHEET NO. 2 G-1 OF 90 SHEETS

PATH: V:\Ridgecrest - FN-09105 - Ridgecrest Blvd\CADD\Drawing\ FILE NAME: RCB_G-1-G-2 PLOT DATE: Jan 31, 2012-03:15:34pm CAD USER: ksmith

CONSTRUCTION STAKING NOTES

1. CONTRACTOR SHALL SUBMIT ALL STAKING REQUESTS ON THE STAKING REQUEST FORM PROVIDED BY THE RESIDENT ENGINEER TO THE RESIDENT ENGINEER FOR REVIEW AND APPROVAL WITH A MINIMUM OF 72 HOURS NOTICE IN ADVANCE OF STARTING AN OPERATION THAT WILL USE THE STAKES

2. RESIDENT ENGINEER SHALL PROVIDE A MINIMUM OF 48 HOURS NOTICE TO THE SURVEY CREW TO SCHEDULE MOBILIZATION. FRIDAY TO MONDAY DOES NOT CONSTITUTE 48 HOURS NOTICE.

3. IN THE EVENT THAT A STAKING OPERATION IS ESTIMATED TO TAKE MORE THAN ONE DAY TO COMPLETE, ADD 24 HOURS TO THE MINIMUM 48 HOURS ADVANCE NOTICE FOR EACH ESTIMATED ADDITIONAL DAY OF STAKING.

4. CONTRACTOR SHALL ESTABLISH STAKING PRIORITIES FOR EACH STAKING REQUEST AND NOTE THE PRIORITIES ON THE STAKING REQUEST FORM. IF NO PRIORITIES ARE GIVEN BY THE CONTRACTOR, STAKING WILL PROCEED IN THE ORDER LISTED ON THE STAKING REQUEST FORM. THE CONTRACTOR SHALL NOT REQUEST ADDITIONAL PRIORITIES OR DIFFERENT CREW MOBILIZATIONS IN EXCESS OF THAT LISTED ON EACH STAKING REQUEST ONCE THE SURVEY CREW HAS BEEN MOBILIZED.

5. CONTRACTOR SHALL DISCUSS THE SCHEDULING OF STAKING NEEDS BY PROVIDING A 3 WEEK LOOK-AHEAD SCHEDULE OF OPERATIONS AND TIME ESTIMATES TO THE RESIDENT ENGINEER

6. CONTRACTOR SHALL SUBMIT A STAKING REQUEST TO THE RESIDENT ENGINEER ENSURING THAT THE REQUESTED STAKING AREA IS READY FOR STAKES AND THAT THE STAKES WILL BEGIN TO BE USED WITHIN 5 DAYS OF STAKING.

7. RESIDENT ENGINEER SHALL VERIFY THAT THE CONTRACTOR'S REQUESTS FOR CONSTRUCTION STAKES ARE ACCEPTABLE, INCLUDING

   (i) THE REQUESTED STAKING AREA IS READY FOR STAKES
   (ii) THE STAKES WILL BE USED IN A REASONABLE TIME PERIOD
   (iii) THE STAKES HAVE BEEN REQUESTED IN A REASONABLE LENGTH OF TIME IN ADVANCE
   (iv) REQUESTS FOR "ORIGINAL" STAKES ARE TRULY ORIGINAL.

8. CONTRACTOR SHALL COORDINATE CONSTRUCTION OPERATIONS SUCH THAT AREAS TO RECEIVE STAKES ARE RELATIVELY CLEAR OF CONSTRUCTION EQUIPMENT AND ACTIVITY SUCH THAT STAKES CAN BE SET IN SAFE AND EXPEDITIOUS MANNER.

9. IF A SURVEY FIELD CREW IS MOBILIZED TO AN AREA THAT IS NOT READY FOR STAKES, THE RESIDENT ENGINEER WILL CHARGE THE CONTRACTOR A MINIMUM OF 4 HOURS OF FIELD CREW TIME AS AN EXTRA ABOVE THE CONTRACT AMOUNT AND THE STAKING REQUEST WILL BE VOIDED BY THE RESIDENT ENGINEER. THE CONTRACTOR SHALL SUBMIT A NEW REQUEST FOR THE STAKES WHEN THE AREA OR FACILITY HAS BEEN PROPERLY PREPARED.

10. IF THE CONTRACTOR DETERMINES THAT THE STAKING PROVIDED APPEARS TO HAVE DISCREPANCIES OR IS AMBIGUOUS, A REQUEST FOR CLARIFICATION MUST BE SENT TO THE RESIDENT ENGINEER WITHIN 24 HOURS FROM THE TIME OF STAKING. IF THE ORIGINAL STAKING PROVIDED HAS UNDERGONE UNIT CONVERSION, ALTERED OR DISTURBED THEN THE CONTRACTOR ASSUMES ALL RESPONSIBILITY OF THE ACCURACY OF THE CONVERSIONS AND/OR ALTERATIONS.

11. CONTRACTOR SHALL BE RESPONSIBLE FOR SETTING WORKING STAKES (IE:"BLUETOPS") AS REQUIRED TO COMPLETE THE WORK.

12. CONTRACTOR SHALL PROVIDE TRAFFIC CONTROL WHEN NECESSARY.

CONTACT INFORMATION

UTILITY	COMPANY	REPRESENTATIVE	TELEPHONE
ELECTRIC	SOUTHERN CA EDISON	DEAN BLACKWELL	(760) 375-1815
GAS	PACIFIC GAS & ELECTRIC	SANDY RATTO FRANK MARTINEZ	(760) 382-1019 (661) 342-1523
SEWER	CITY OF RIDGECREST WASTE WATER	JOHN BRACKEN	(760) 371-3791
WATER	INDIAN WELLS VALLEY WATER DISTRICT	LES KRAMER CHARLES POUNDS	(760) 608-2863 (760) 793-7954
WATER	SEARLES VALLEY MINERALS	BARRY WALLACE	(760) 372-2064
CABLE	MEDIACOM CABLE TELEVISION	ANTHONY (MATTHEW) SOBIESKI	(760) 590-8017
PHONE	VERIZON	DONALD CHUNG LEWIS EDROZO LARRY MILLER ERNIE CARTER	(760) 375-6616
	CALIFORNIA DEPARTMENT OF TRANSPORTATION	MARK REISTETTER	(760) 872-0674
	KERN COUNTY	XXXXXXXXX	(760) XXXXXXX
	CITY OF RIDGECREST	LOREN CULP	(760) 499-5082

SHELF-READY PLANS - NOT FOR CONSTRUCTION

Project No.							
ST0101	CITY OF RIDGECREST W. RIDGECREST BOULEVARD RECONSTRUCTION PROJECT GENERAL NOTES	REGISTERED PROFESSIONAL ENGINEER EDGAR A. NORIEGA No. 61555 Exp. 6/30/13 CIVIL STATE OF CALIFORNIA	MARK THOMAS & COMPANY, INC. 7571 N REMINGTON AVENUE, SUITE 102 FRESNO, CALIFORNIA 93720 (559) 447-1938 FAX: (559) 447-8586 WWW.MARKTHOMAS.COM MTCO JOB NUMBER: FN-09105	DATE: 11/18/2011 SCALE: DRAWN BY: KS/MB/JL CK'D BY: CC DATE CK'D:	Revisions	Checked By	Date Checked	SHEET NO. 3 G-2 OF 90 SHEETS

CAD USER: ksmith
PLOT DATE: Jan 31, 2012-03:15:35pm
FILE NAME: RCB_G-1-G-2
PATH: V:\Ridgecrest - FN-09105 - Ridgecrest Blvd\CADD\Drawing\

LEGEND

- △ FOUND MONUMENT – HORIZONTAL
- ⊙ FOUND MONUMENT – VERTICAL
- (No) CONTROL POINT NUMBER
- • FOUND MONUMENT

NOTES:

1. FOR COMPLETE PROJECT CONTROL AND MONUMENTATION DATA, SEE THE SURVEY RECORDS ON FILE IN THE SURVEY DEPARTMENT AT THE CALTRANS DISTRICT SIX OFFICE.
2. CONTRACTOR SHALL COMPLY WITH BUSINESS AND PROFESSIONS CODE SECTION 8771(b) REGARDING REFERENCING, PRESERVING, AND RECONSTRUCTING MONUMENTS, WHETHER OR NOT MONUMENTS ARE SHOWN IN THESE PLANS.
3. IF MONUMENT IS DAMAGED BY CONTRACTOR'S OPERATIONS, CONTRACTOR SHALL REPLACE AT CONTRACTOR'S COST.

DATUM

NORTH AMERICAN VERTICAL DATUM 29 BASED ON RIDGECREST BENCHMARKS – BM 21, 95, 96, &104. CCS83, ZONE 5 EPOCH 2002.00 AS DERIVED FROM OPUS.

LINE TABLE

LINE No.	LENGTH	BEARING
1	3120.77'	N 89°52'18" E
2	2667.43'	N 89°53'12" E
3	1828.22'	N 89°46'19" E
4	833.50'	N 89°49'34" E

CURVE TABLE

CURVE No.	RADIUS	DELTA	TANGENT	LENGTH
1	3000.00'	2°00'06"	52.41'	104.80'
2	3000.00'	1°53'13"	49.41'	98.81'
3	3000.00'	2°51'05"	74.66'	149.30'
4	3000.00'	2°47'50"	73.24'	146.46'

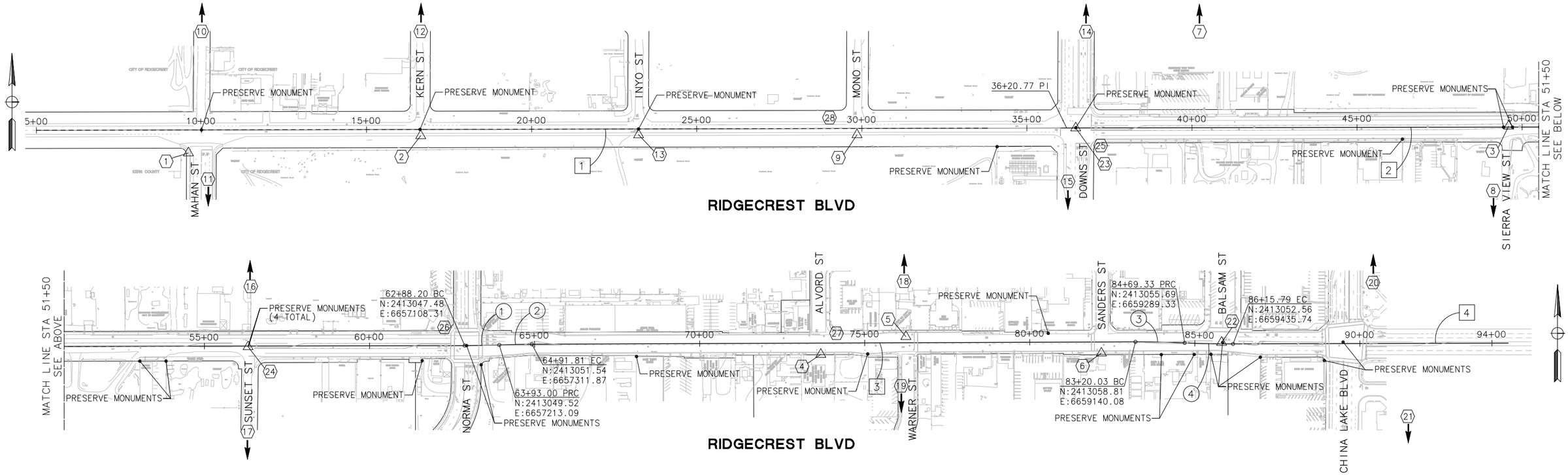

SURVEY CONTROL TABLE

No.	POINT No.	NORTHING	EASTING	ELEVATION	DESCRIPTION	APPROX. LOCATION
1	1000	2412966.74	6651780.47	2319.86	CUT X	9+60.19, 69.50 Rt
2	1001	2413018.79	6652484.09	2349.39	MAG NAIL & SHINER	16+63.93, 19.03 Rt
3	1002	2413047.95	6655779.52	2321.10	PK & SHINER	49+59.41, 3.10 Lt
4	1003	2413020.77	6658187.06	2302.92	CUT X	73+66.87, 34.25 Rt
5	1004	2413074.61	6658444.79	2300.59	PK & SHINER	76+24.81, 18.57 Lt
6	1005	2413024.48	6659036.90	2295.41	CUT X	82+16.72, 33.92 Rt
7	1010	2415374.35	6654839.73	————	BRASS TAG	APPROX 2331 FEET NORTH OF RIDGECREST BLVD AND 360' EAST OF DOWNS ST
8	1011	2410183.87	6655738.44	————	100d NAIL	APPROX 2861 FEET SOUTH OF RIDGECREST BLVD AND 1292' EAST OF DOWNS ST
9	1015	2413021.74	6653805.67	2335.81	PK & SHINER	29+85.51, 19.03 Rt
10	2001	2414054.56	6651832.85	2337.87	PK & SHINER	10+15.01, 1018.2 Lt
11	2002	2412566.80	6651847.67	2359.81	MAG NAIL & SHINER	10+26.50, 469.6 Rt
12	2003	2413730.49	6652486.09	————	PK & SHINER	16+67.52, 692.7 Lt
13	2004	2413021.54	6653144.16	2344.02	MAG NAIL & SHINER	23+24, 17.75 Rt
14	2005	2413597.11	6654511.39	2324.91	MAG NAIL & SHINER	36+92.37, 554.77 Lt
15	2006	2412373.32	6654444.34	2330.10	PK & SHINER	36+22.90, 668.88 Rt
16	2007	2413532.74	6656458.35	————	MAG NAIL & SHINER	56+39.20, 486.55 Lt
17	2008	2412668.46	6656448.45	————	MAG NAIL & SHINER	56+27.59, 377.71 Rt
18	2009	2413314.52	6658439.11	————	MAG NAIL & SHINER	76+20.09, 258.50 Lt
19	2010	2412517.12	6658433.52	————	MAG NAIL & SHINER	76+11.32, 538.88 Rt
20	2011	2413536.27	6659859.14	2290.14	SURVEY SPIKE	90+40.66, 482.42 Lt
21	2012	2412398.77	6659968.50	2285.05	NAIL & WASHER	91+46.56, 655.40 Rt
22	2013	2413057.19	6659401.13	2292.32	SURVEY SPIKE	85.81.14, 4.53 Lt
23	3003	2413042.25	6654468.07	2326.31	MONUMENT WELL	36+48.06, 0.20 Rt
24	3004	2413043.90	6656452.20	2315.43	NAIL & WASHER	56+32.08, 2.28 Rt
25	BM21			2327.699	CHRIS BOX TC	SE CORNER OF DOWNS & RIDGECREST
26	BM95			2311.52	CHRIS BOX TC	NW CORNER OF NORMA & RIDGECREST
27	BM96			2302.28	CHRIS BOX TC	NE CORNER OF ALVORD & RIDGECREST
28	BM104			2338.70	RR SPIKE	NW CORNER OF MONO & RIDGECREST

SHELF-READY PLANS - NOT FOR CONSTRUCTION

Project No.	
ST0101	CITY OF RIDGECREST W. RIDGECREST BOULEVARD RECONSTRUCTION PROJECT SURVEY CONTROL DIAGRAM

REGISTERED PROFESSIONAL ENGINEER EDGAR A. NORIEGA No. 61555 Exp. 6/30/13 CIVIL STATE OF CALIFORNIA

MARK THOMAS & COMPANY, INC.
7571 N REMINGTON AVENUE, SUITE 102
FRESNO, CALIFORNIA 93720
(559) 447-1938 FAX: (559) 447-8586
WWW.MARKTHOMAS.COM
MTCO JOB NUMBER: FN-09105

DATE: 11/18/2011
SCALE:
DRAWN BY: KS/MB/JL
CK'D BY: GC
DATE CK'D:

Revisions	Checked By	Date Checked

SHEET NO. 4

S-1

OF 90 SHEETS

CAD USER: ksmith
PLOT DATE: Jan 31, 2012-03:15:42pm
FILE NAME: RCB_S-1
PATH: V:\Ridgecrest - FN-09105 - Ridgecrest Blvd\CADD\Drawing\

SIDE STREET PAVEMENT SECTIONS (SEE SHEET X-5)				
SIDE STREET INTERSECTION	TRAFFIC INDEX	"R" VALUE	PAVEMENT SECTION	
			AC[1] SECTION	AB[2] SECTION
MAHAN STREET	7.0	50	4"	7"
KERN STREET	7.0	50	4"	7"
INYO STREET	7.0	50	4"	7"
MONO STREET	7.0	50	4"	7"
DOWNS STREET	10.0	50	6"	10"
SIERRA VIEW STREET	5.0	50	3"	4"
SUNSET STREET	5.0	50	3"	4"
NORMA STREET	10.0	50	6"	10"
ALVORD STREET	7.0	50	4"	7"
WARNER STREET	7.0	50	4"	7"
SANDERS STREET	7.0	50	4"	7"
BALSAM STREET	10.0	50	6"	10"
PARKING LOT MISC AC	–	–	2"	4"

* WHERE THE MAINLINE PAVEMENT SECTION MEETS THE SIDE STREET PAVEMENT SECTIONS, THE MAINLINE PAVEMENT SECTION SHALL GOVERN.
** ALL SECTIONS SHALL HAVE 6" NATIVE SOIL COMPACTED TO 95% RELATIVE COMPACTION
[1]AC = ASPHALT CONCRETE (TYPE A)
[2]AB = AGGREGATE BASE (CLASS 2)

MAINLINE PAVEMENT SECTION				
MAINLINE STREET	TRAFFIC INDEX	"R" VALUE	PAVEMENT SECTION	
			AC[1] SECTION	FDR SECTION
RIDGECREST BOULEVARD	10.0	12	6"	12"

[1]AC = ASPHALT CONCRETE (TYPE A)

LEGEND

1 4" CLASS 2 AGGREGATE BASE

2 6" NATIVE SOIL WITH 95% RELATIVE COMPACTION

NOTES

1. EXISTING PAVEMENT SECTIONS SHOWN ARE BASED ON AS-BUILTS AND ARE SUBJECT TO VARIATION DUE TO CONSTRUCTION TOLERANCES AND MAINTENANCE ACTIVITIES (i.e. OVERLAYS). THE CONTRACTOR IS CAUTIONED THAT ONLY ACTUAL EXCAVATION WILL REVEAL THE ACTUAL DEPTH AND EXTENT OF THE ROADWAY STRUCTURAL SECTION.
2. SEE SOILS REPORT AND SPECS FOR ADDITIONAL INFORMATION ON SOILS PREPARATION AND CONSTRUCTION TECHNIQUES

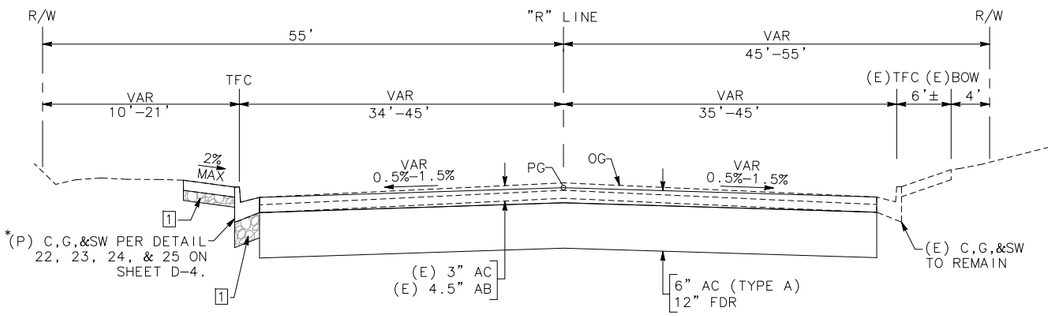

RIDGECREST BOULEVARD (B)

STA 35+75 TO 37+83

NTS

* SEE LAYOUT SHEETS FOR BEG AND END OF PROPOSED SW.

STATION RANGES FOR 2:1 SLOPES	
FROM	TO
10+50 Lt	12+50 Lt
12+50 Rt	14+50 Rt
20+40 Lt	22+20 Lt
22+80 Rt	25+00 Rt
29+50 Rt	30+80 Rt
31+80 Lt	35+20 Lt
50+00 Rt	53+50 Rt

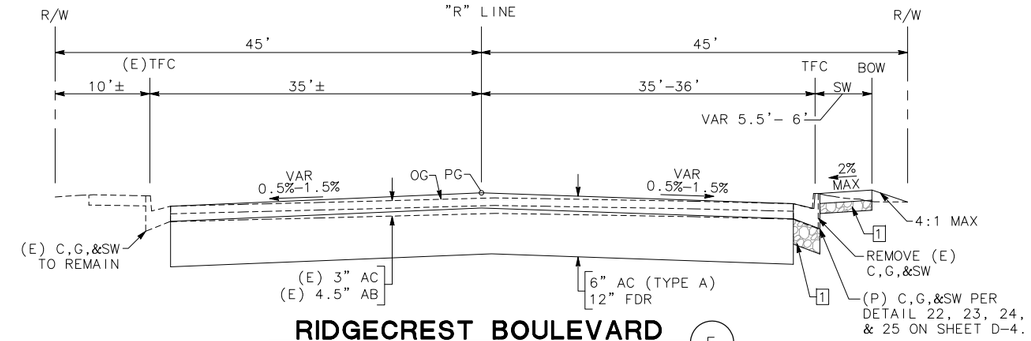

RIDGECREST BOULEVARD (E)

STA 48+04 TO 51+28
STA 52+20 TO 56+84

NTS

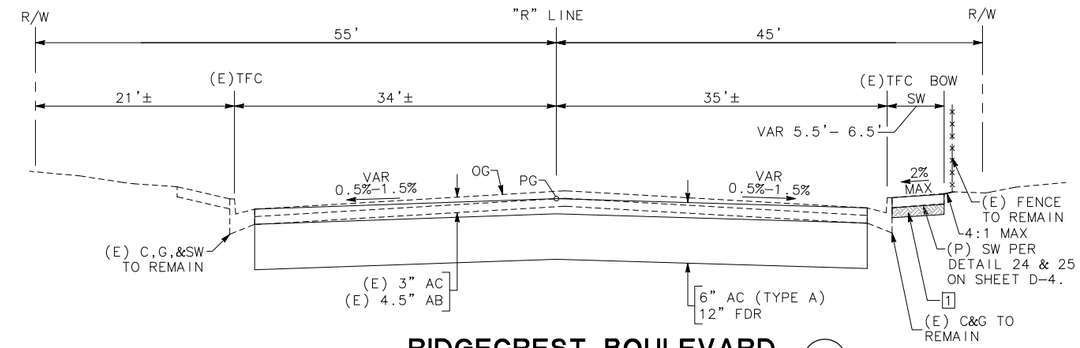

RIDGECREST BOULEVARD (D)

STA 41+74 TO 42+21
STA 42+64 TO 43+07

NTS

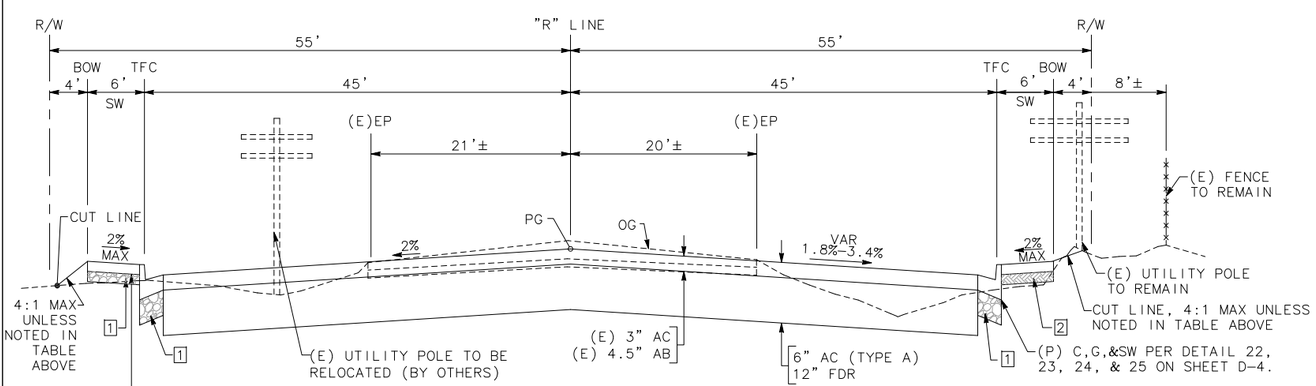

RIDGECREST BOULEVARD (A)

STA 10+36.64 TO 35+75

NTS

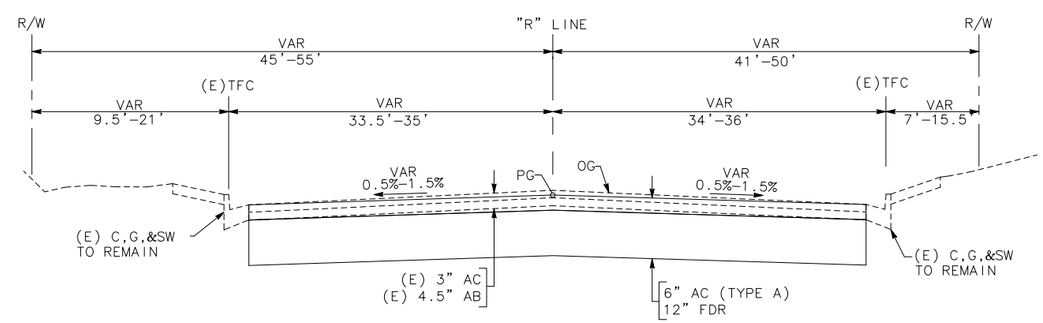

RIDGECREST BOULEVARD (C)

STA 37+83 TO 41+74
STA 42+21 TO 42+64
STA 43+07 TO 48+04
STA 56+84 TO 60+36

NTS

SHELF-READY PLANS - NOT FOR CONSTRUCTION

Project No.			
ST0101	CITY OF RIDGECREST W. RIDGECREST BOULEVARD RECONSTRUCTION PROJECT TYPICAL CROSS SECTIONS	REGISTERED PROFESSIONAL ENGINEER EDGAR A. NORIEGA No. 61555 Exp. 6/30/13 CIVIL STATE OF CALIFORNIA	MARK THOMAS & COMPANY, INC. 7571 N REMINGTON AVENUE, SUITE 102 FRESNO, CALIFORNIA 93720 (559) 447-1938 FAX: (559) 447-8586 WWW.MARKTHOMAS.COM MTCO JOB NUMBER: FN-09105

DATE: 11/18/2011	Revisions	Checked By	Date Checked
SCALE: NTS			
DRAWN BY: KS/MB/JL			
CK'D BY: CG			
DATE CK'D:			

SHEET NO. 5

X-1

OF 90 SHEETS

CAD USER: ksmith
PLOT DATE: Jan 31, 2012-03:15:47pm
FILE NAME: RCB_X-1-X-5
PATH: V:\Ridgecrest - FN-09105 - Ridgecrest Blvd\CADD\Drawing\

CAD USER: ksmith
PLOT DATE: Jan 31, 2012-03:15:49pm
FILE NAME: RCB_X-1-X-5
PATH: V:\Ridgecrest - FN-09105 - Ridgecrest Blvd\CADD\Drawing\

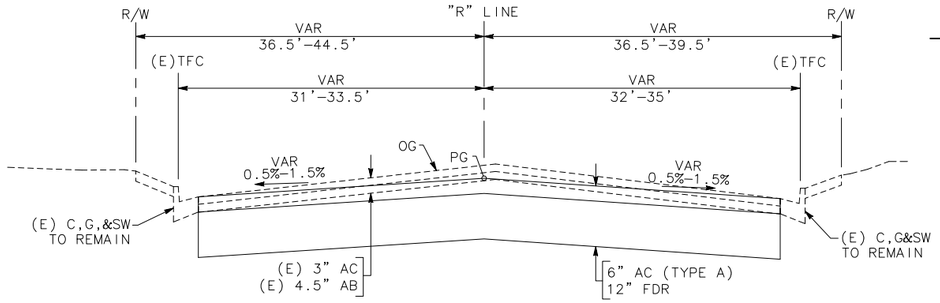

RIDGECREST BOULEVARD (H)

STA 63+62 TO 64+35

NTS

LEGEND

1. 4" CLASS 2 AGGREGATE BASE
2. 6" NATIVE SOIL WITH 95% RELATIVE COMPACTION

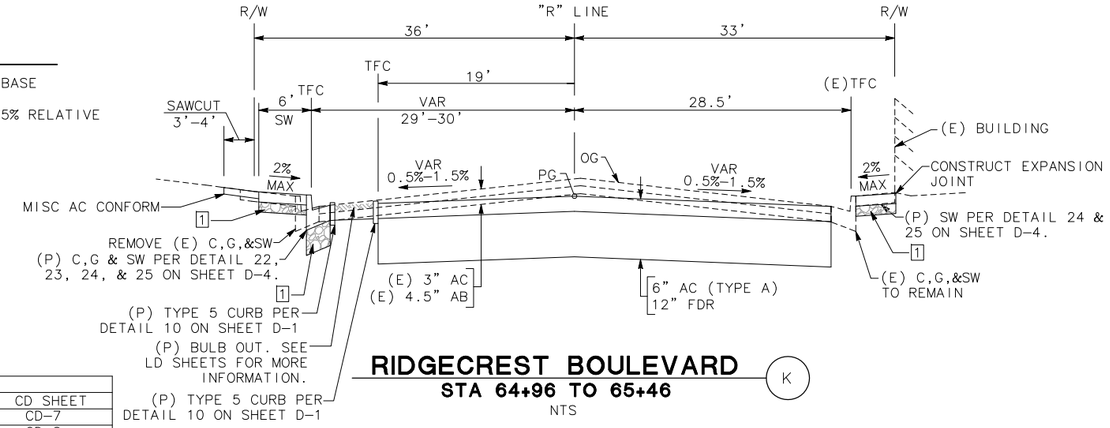

RIDGECREST BOULEVARD (K)

STA 64+96 TO 65+46

NTS

BULB OUT LOCATION TABLE			
CROSS SECTION	BEG BULB OUT	END BULB OUT	CD SHEET
I	64+35.28 Rt	64+44.91 Rt	CD-7
K	64+97.26 Lt	65+33.96 Lt	CD-8

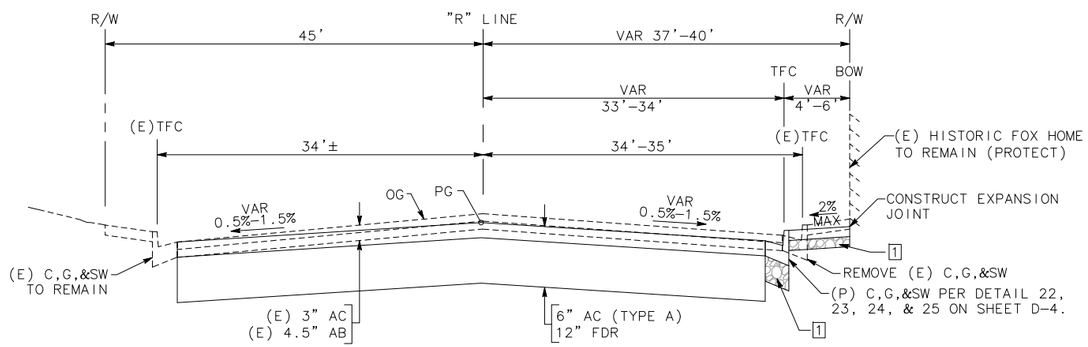

RIDGECREST BOULEVARD (G)

STA 60+36 TO 63+62

NTS

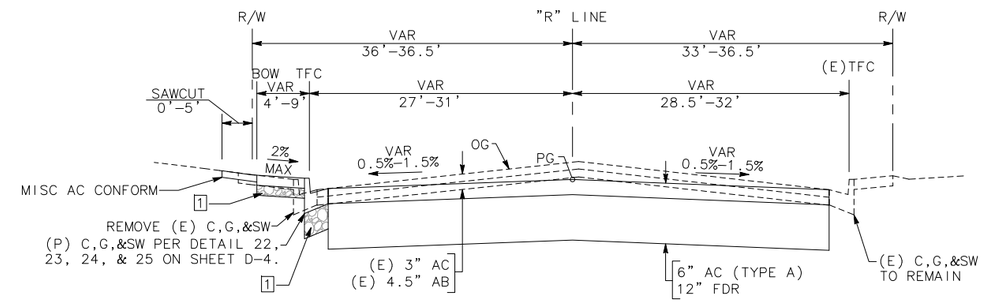

RIDGECREST BOULEVARD (J)

STA 64+45 TO 64+96
STA 65+46 TO 66+18

NTS

2:1 SLOPE	
FROM	TO
10+50 Lt	12+50 Lt
12+50 Rt	14+50 Rt
20+40 Lt	22+20 Lt
22+80 Rt	25+00 Rt
29+50 Rt	30+80 Rt
31+80 Lt	35+20 Lt
50+00 Rt	53+50 Rt

1) UNLESS NOTED IN THE TABLE ABOVE, DAYLIGHT SLOPE SHALL BE 4:1 TO EXISTING.

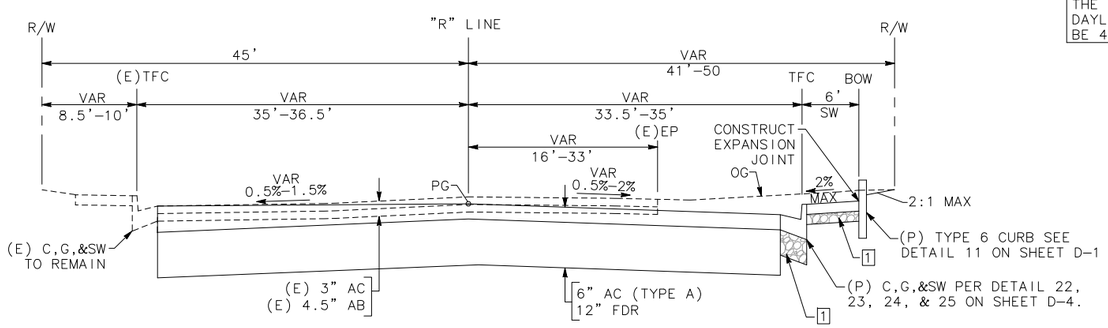

RIDGECREST BOULEVARD (F)

STA 51+28 TO 52+20

NTS

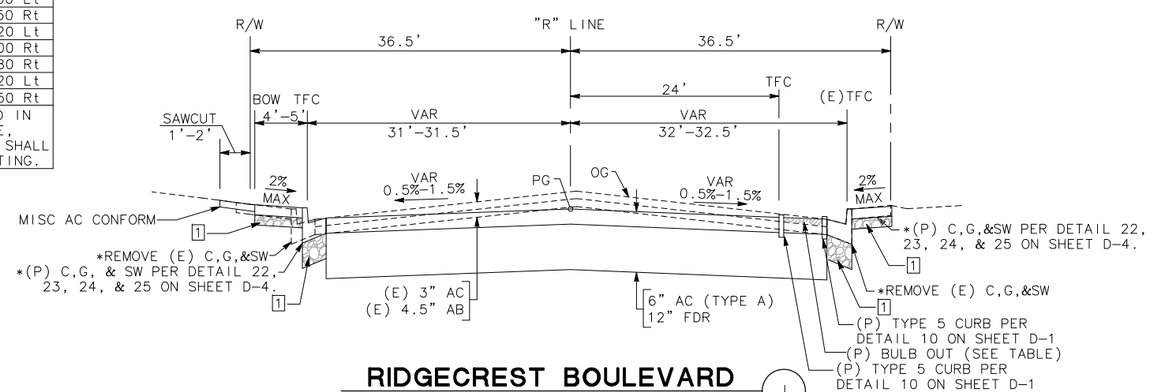

RIDGECREST BOULEVARD (I)

STA 64+35 TO 64+45

NTS

* SEE LAYOUT SHEETS FOR BEG AND END OF PROPOSED SW.

SHELF-READY PLANS - NOT FOR CONSTRUCTION

Project No.	CITY OF RIDGECREST W. RIDGECREST BOULEVARD RECONSTRUCTION PROJECT TYPICAL CROSS SECTIONS	RECEIVED PROFESSIONAL ENGINEER EDGAR A. NORIEGA No. 61555 Exp. 6/30/13 CIVIL STATE OF CALIFORNIA	MARK THOMAS & COMPANY, INC. 7571 N REMINGTON AVENUE, SUITE 102 FRESNO, CALIFORNIA 93720 (559) 447-1938 FAX: (559) 447-8586 WWW.MARKTHOMAS.COM MTCO JOB NUMBER: FN-09105	DATE: 11/18/2011 SCALE: NTS DRAWN BY: KS/MB/JL CK'D BY: CC DATE CK'D:	Revisions	Checked By	Date Checked	SHEET NO. 6 X-2 OF 90 SHEETS
ST0101								

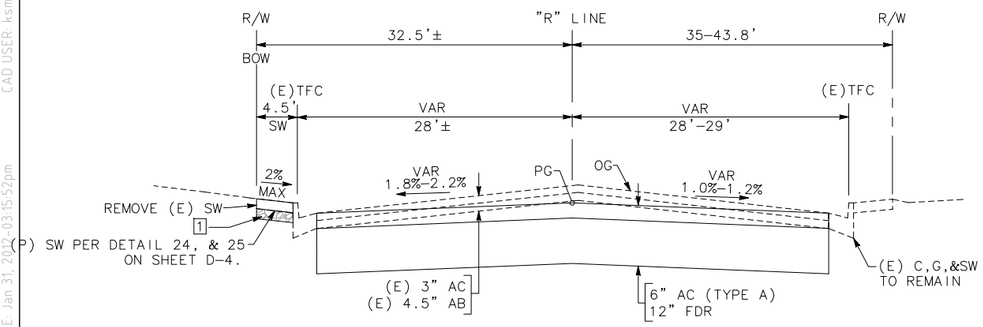

RIDGECREST BOULEVARD (N)

STA 70+89 TO 71+69

NTS

LEGEND

1. 4" CLASS 2 AGGREGATE BASE
2. 6" NATIVE SOIL WITH 95% RELATIVE COMPACTION

BULB OUT LOCATION TABLE			
CROSS SECTION	BEG BULB OUT	END BULB OUT	CD SHEET
L	66+15.71 Rt	66.66.26 Rt	CD-7
O	69+44.73 Rt	69+72.24 Rt	CD-8
O	70+18.06 Lt	70+52.84 Lt	CD-9
P	73+19.80 Lt	73+40.97 Lt	CD-9
P	73+56.85 Rt	73+78.22 Rt	CD-9
P	73+89.36 Lt	74+28.59 Lt	CD-9
Q	74+12.60 Rt	74+39.85 Rt	CD-9
R	74+64.66 Lt	74+94.01 Lt	CD-9
R	75+79.30 Rt	76+05.98 Rt	CD-10
R	76+54.84 Rt	76+81.13 Rt	CD-10
S	82+00.84 Rt	82+28.16 Rt	CD-12
S	82+49.89 Lt	83+53.18 Lt	CD-12 &CD-13
S	82+68.51 Rt	82+94.69 Rt	CD-12

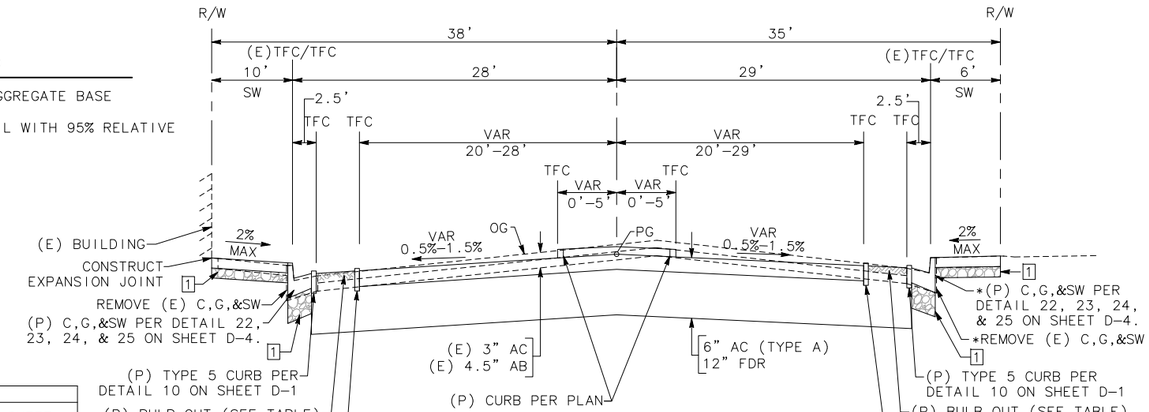

RIDGECREST BOULEVARD (Q)

STA 74+08 TO 74+40
STA 82+01 TO 83+01

NTS

* SEE LAYOUT SHEETS FOR BEG AND END OF PROPOSED SW

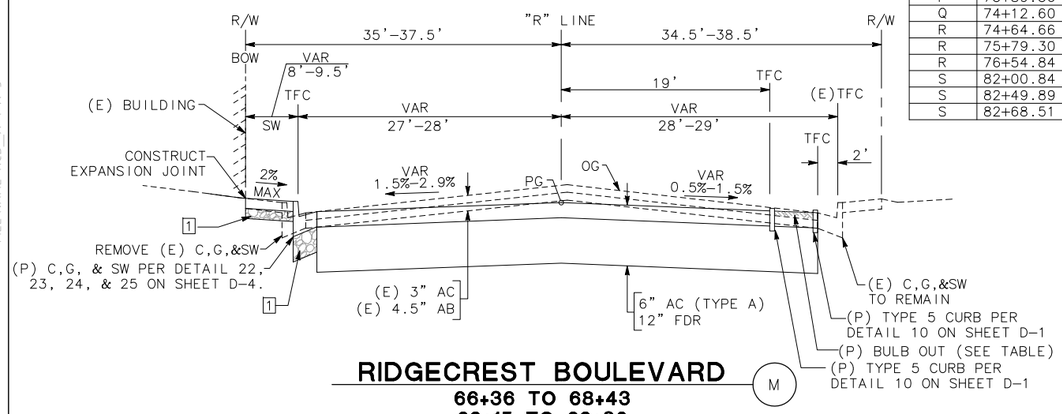

RIDGECREST BOULEVARD (M)

66+36 TO 68+43
69+15 TO 69+30

NTS

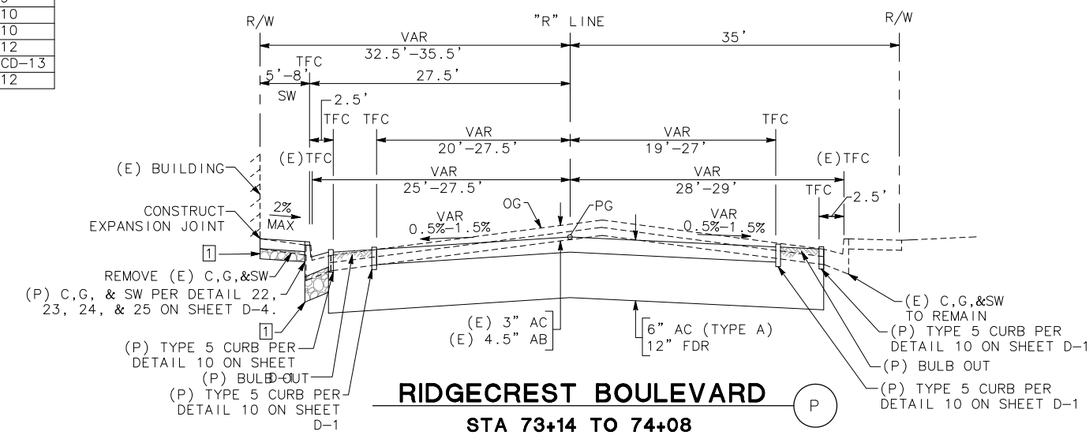

RIDGECREST BOULEVARD (P)

STA 73+14 TO 74+08

NTS

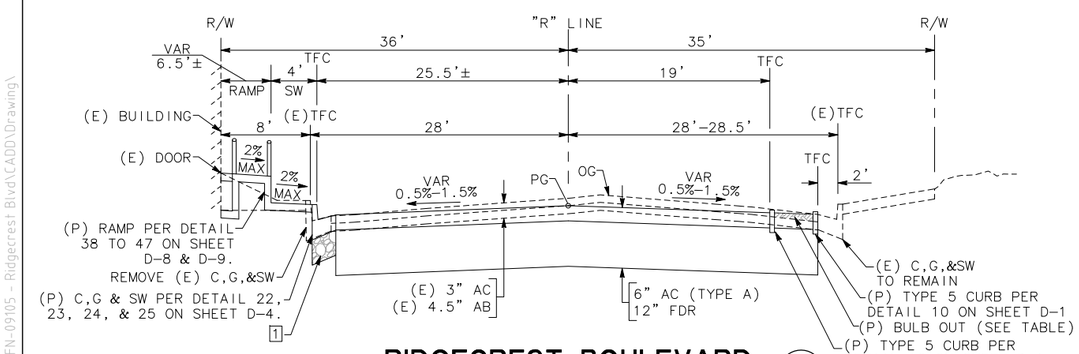

RIDGECREST BOULEVARD (L)

STA 66+18 TO 66+36
STA 68+43 TO 69+15

NTS

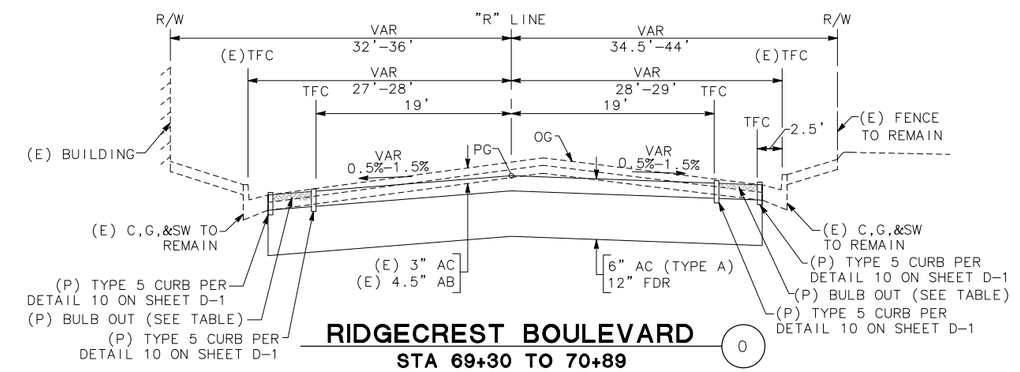

RIDGECREST BOULEVARD (O)

STA 69+30 TO 70+89
STA 71+69 TO 73+14

NTS

SHELF-READY PLANS - NOT FOR CONSTRUCTION

Project No.	CITY OF RIDGECREST W. RIDGECREST BOULEVARD RECONSTRUCTION PROJECT TYPICAL CROSS SECTIONS	REGISTERED PROFESSIONAL ENGINEER EDGAR A. NORIEGA No. 61555 Exp. 6/30/13 CIVIL STATE OF CALIFORNIA	MARK THOMAS & COMPANY, INC. 7571 N REMINGTON AVENUE, SUITE 102 FRESNO, CALIFORNIA 93720 (559) 447-1938 FAX: (559) 447-8586 WWW.MARKTHOMAS.COM MTCO JOB NUMBER: FN-09105	DATE: 11/18/2011 SCALE: NTS DRAWN BY: KS/MB/JL CK'D BY: GG DATE CK'D:	Revisions	Checked By	Date Checked	SHEET NO. 7 X-3 OF 90 SHEETS
ST0101								

CAD USER: ksmith
PLOT DATE: Jan 31, 2012 03:15:52pm
FILE NAME: RCB_X-1-X-5
PATH: V:\Ridgecrest - FN-09105 - Ridgecrest Blvd\CADD\Drawing\

CAD USER: ksmith
PLOT DATE: Jan 31, 2012-03:15:54pm
FILE NAME: RCB_X-1-X-5
PATH: V:\Ridgecrest - FN-09105 - Ridgecrest Blvd\CADD\Drawing\

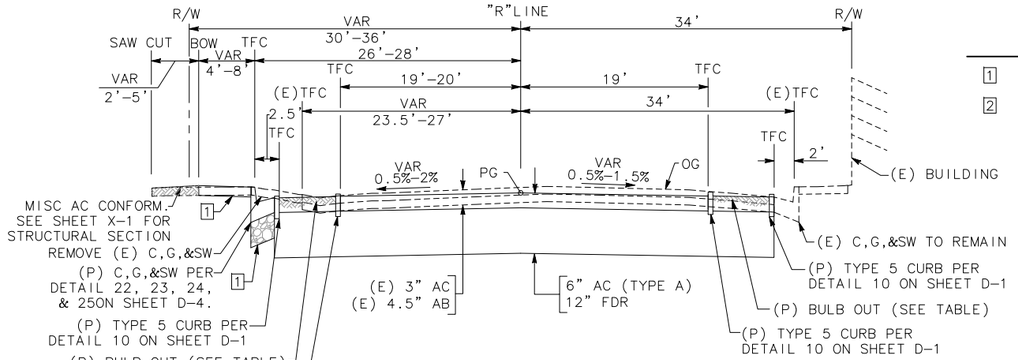

RIDGECREST BOULEVARD (T)

STA 77+94 TO 82+01

NTS

LEGEND

1. 4" CLASS 2 AGGREGATE BASE
2. 6" NATIVE SOIL WITH 95% RELATIVE COMPACTION

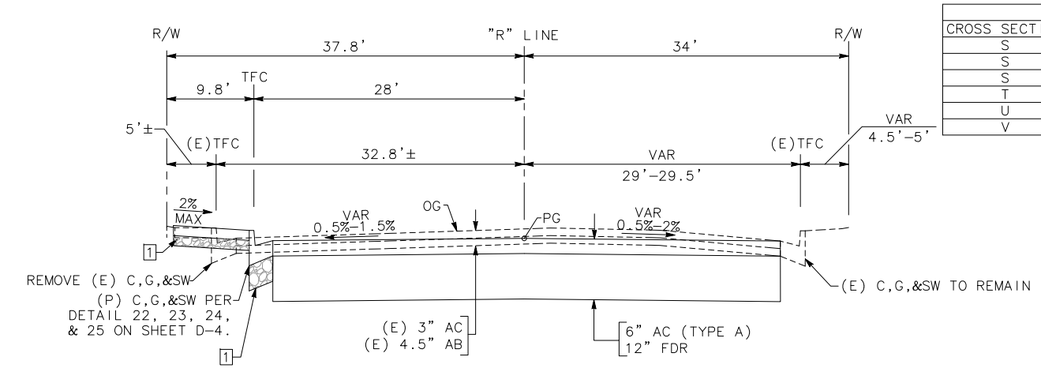

RIDGECREST BOULEVARD (S)

STA 77+40 TO 77+94

NTS

BULB OUT LOCATION TABLE			
CROSS SECTION	BEG BULB OUT	END BULB OUT	CD SHEET NO.
S	78+44.37 Lt	78+71.80 Lt	CD-11
S	79+75.96 Rt	80+39.59 Rt	CD-11
S	81+59.56 Lt	81+90.16 Lt	CD-12
T	83+45.90 Rt	83+70.44 Rt	CD-13
U	84+43.99 Lt	84+90.00 Lt	CD-13
V	85+20.16 Lt	85+50.35 Lt	CD-14

RIDGECREST BOULEVARD (R)

STA 74+40 TO 77+40

NTS

* SEE LAYOUT SHEETS FOR BEG AND END OF PROPOSED SW.

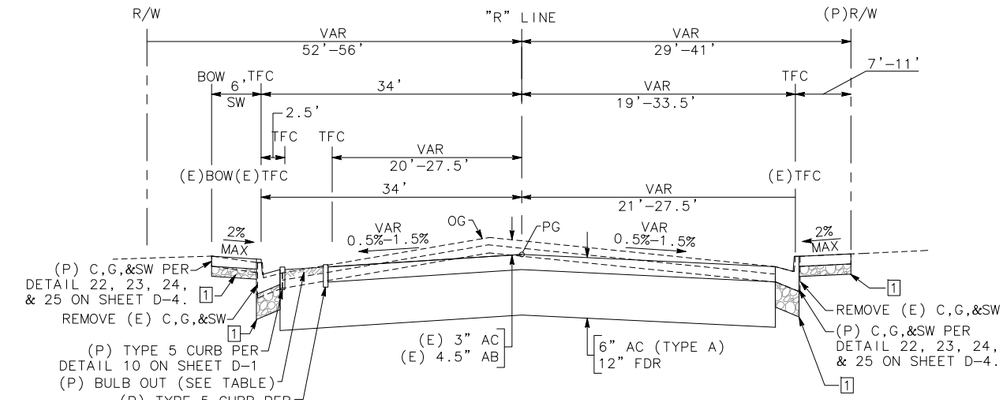

RIDGECREST BOULEVARD (W)

STA 85+05 TO 85+99

NTS

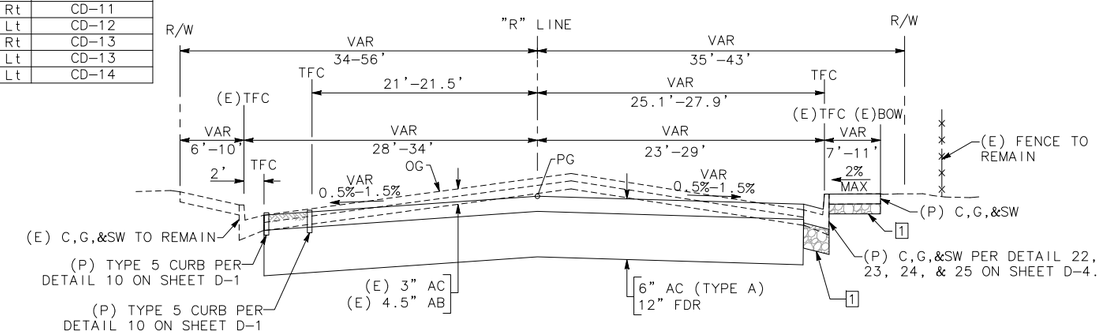

RIDGECREST BOULEVARD (V)

STA 83+70 TO 85+05

NTS

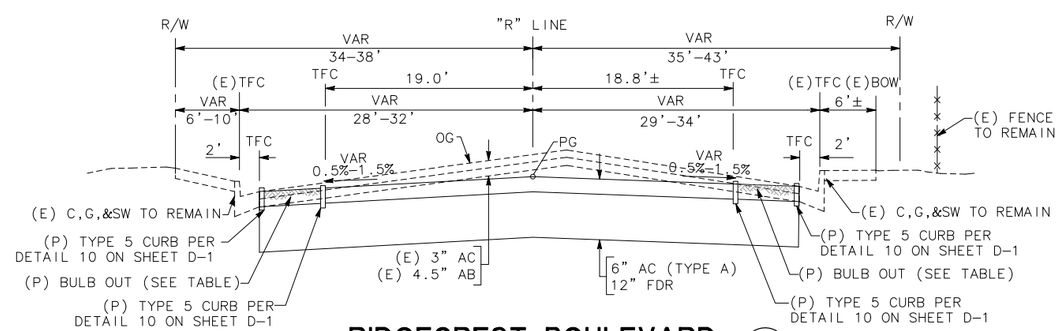

RIDGECREST BOULEVARD (U)

STA 83+01 TO 83+70

NTS

SHELF-READY PLANS - NOT FOR CONSTRUCTION

Project No.			
ST0101	CITY OF RIDGECREST W. RIDGECREST BOULEVARD RECONSTRUCTION PROJECT TYPICAL CROSS SECTIONS	REGISTERED PROFESSIONAL ENGINEER EDGAR A. NORIEGA No. 61555 Exp. 6/30/13 CIVIL STATE OF CALIFORNIA	MARK THOMAS & COMPANY, INC. 7571 N REMINGTON AVENUE, SUITE 102 FRESNO, CALIFORNIA 93720 (559) 447-1938 FAX: (559) 447-8586 WWW.MARKTHOMAS.COM MTCO JOB NUMBER: FN-09105

DATE: 11/18/2011 SCALE: NTS DRAWN BY: KS/MB/JL CK'D BY: CC DATE CK'D:	Revisions	Checked By	Date Checked	SHEET NO. 8 X-4 OF 90 SHEETS

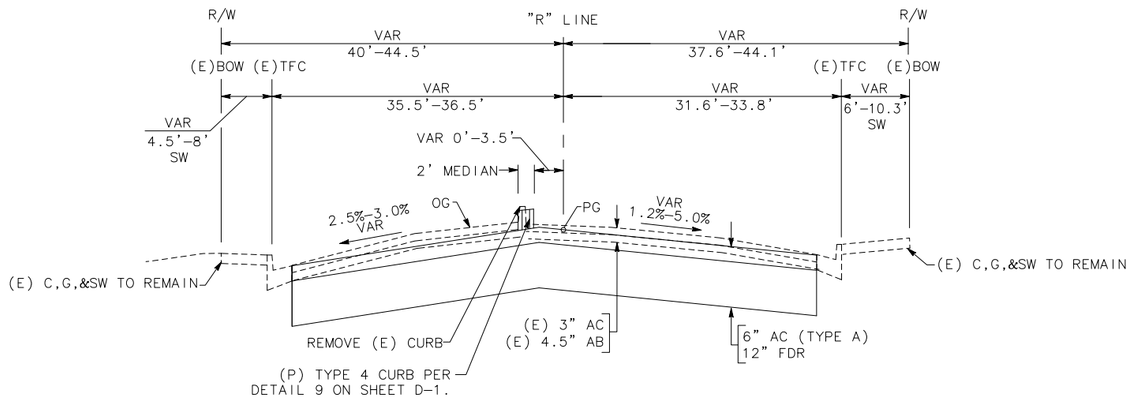

RIDGECREST BOULEVARD (Y)

STA 86+76 TO 88+96

NTS

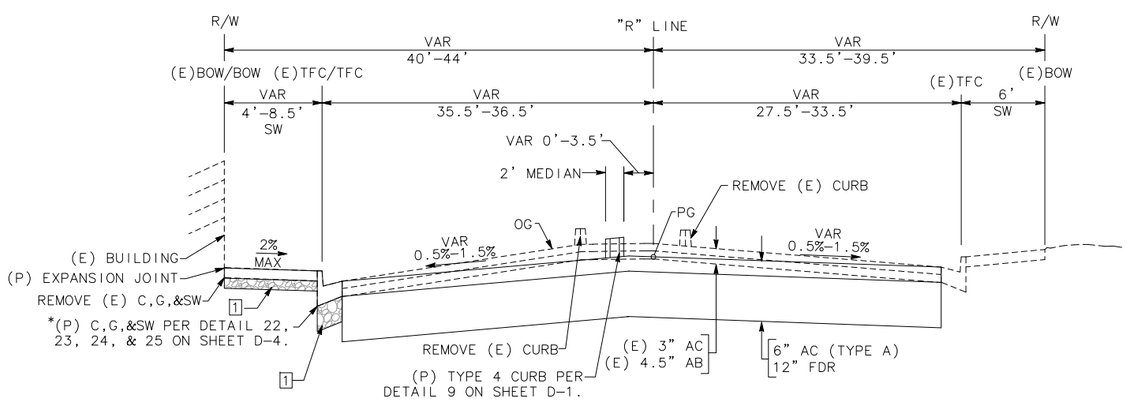

RIDGECREST BOULEVARD (X)

STA 85+99 TO 86+76

NTS

* SEE LAYOUT SHEETS FOR BEG AND END OF PROPOSED SW.

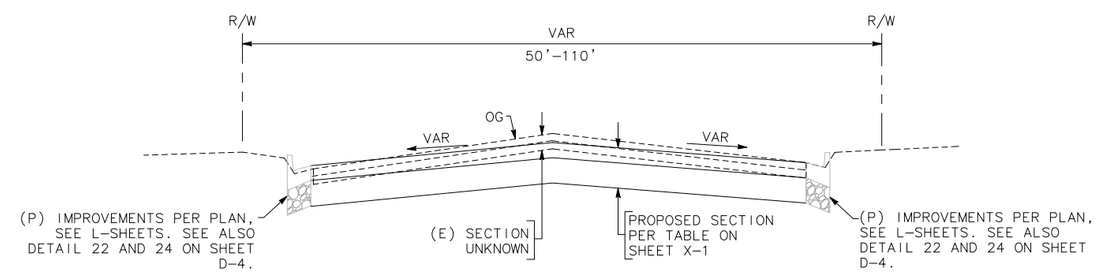

SIDE STREET TYPICAL SECTION (Z)

NTS

SHELF-READY PLANS - NOT FOR CONSTRUCTION

Project No.							
ST0101	CITY OF RIDGECREST W. RIDGECREST BOULEVARD RECONSTRUCTION PROJECT TYPICAL CROSS SECTIONS	RECORDED PROFESSIONAL ENGINEER EDGAR A. NORIEGA No. 61555 Exp. 6/30/13 CIVIL STATE OF CALIFORNIA	MARK THOMAS & COMPANY, INC. 7571 N REMINGTON AVENUE, SUITE 102 FRESNO, CALIFORNIA 93720 (559) 447-1938 FAX: (559) 447-8586 WWW.MARKTHOMAS.COM MTCO JOB NUMBER: FN-09105	DATE: 11/18/2011 SCALE: NTS DRAWN BY: KS/MB/JL CK'D BY: GC DATE CK'D:	Revisions	Checked By	Date Checked	SHEET NO. 9 X-5 OF 90 SHEETS

CAD USER: ksmith
PLOT DATE: Jan 31, 2012-03:15:56pm
FILE NAME: RCB_X-1-X-5
PATH: V:\Ridgecrest - FN-09105 - Ridgecrest Blvd\CADD\Drawing\

CAD USER: ksmith
PLOT DATE: Jan 31, 2012-03:16:01pm
FILE NAME: RCB_D-1-D-9
PATH: V:\Ridgecrest - FN-09105 - Ridgecrest Blvd\CADD\Drawing\

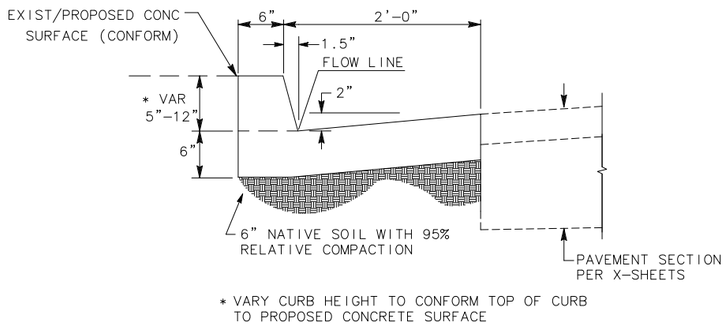

MODIFIED CURB & GUTTER No. 1 (1)
NTS

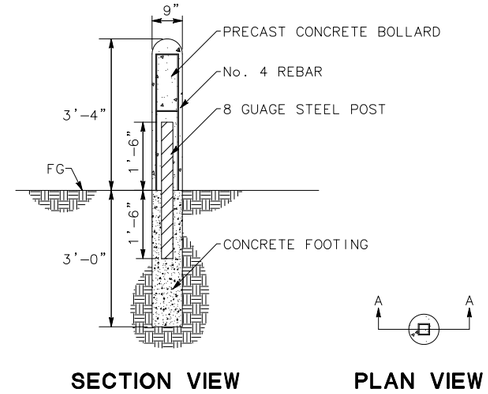

DECORATIVE BOLLARD (2)
NTS

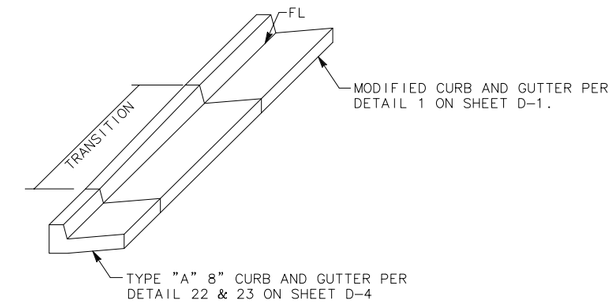

CURB & GUTTER TRANSITION DETAIL (3)
NTS

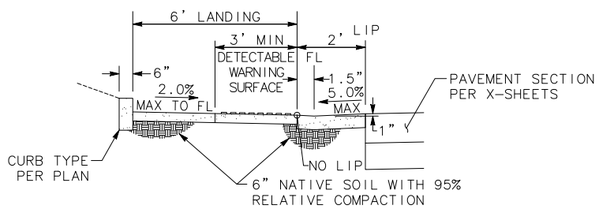

SECTION A-A

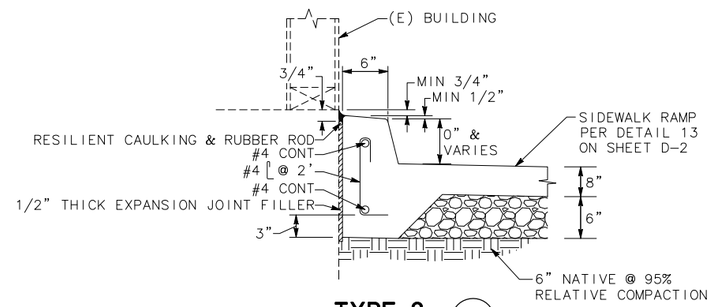

TYPE 2 (7)
NTS

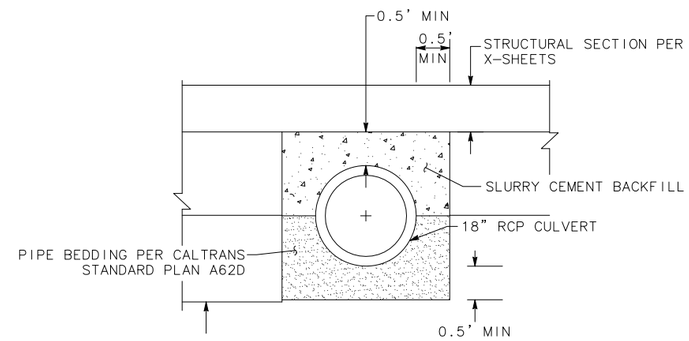

CONCRETE BACKFILL (5)
NTS

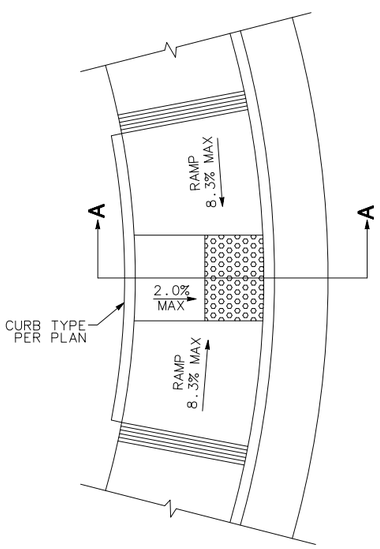

CONSTRUCTION OF NEW SIDEWALK RAMP (4)
NTS

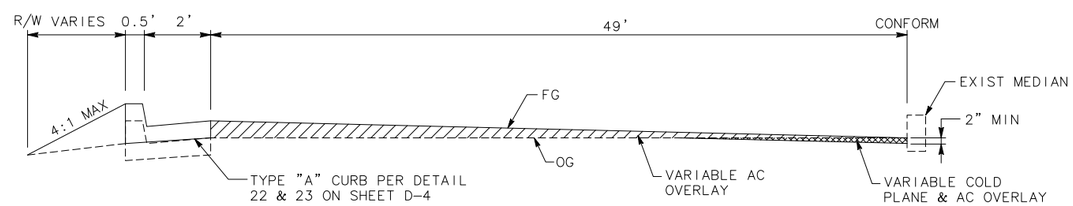

COLD PLANED PAVEMENT CONFORM AT DOWNS ST (6)
NTS

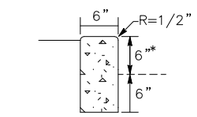

TYPE 3 (8)
NTS

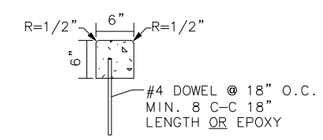

TYPE 4 (9)
NTS

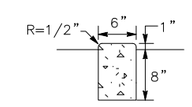

TYPE 5 (10)
NTS

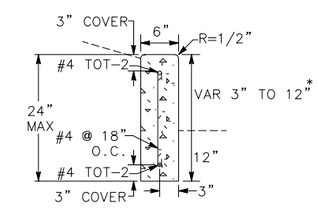

TYPE 6 (11)
NTS

*NOTE: CURB HEIGHT VARIES WITH RAMP SLOPE

SHELF-READY PLANS - NOT FOR CONSTRUCTION

Project No.							
ST0101	CITY OF RIDGECREST W. RIDGECREST BOULEVARD RECONSTRUCTION PROJECT ROADWAY DETAILS	REGISTERED PROFESSIONAL ENGINEER EDGAR A. NORIEGA No. 61555 Exp. 6/30/13 CIVIL STATE OF CALIFORNIA	MARK THOMAS & COMPANY, INC. 7571 N REMINGTON AVENUE, SUITE 102 FRESNO, CALIFORNIA 93720 (559) 447-1938 FAX: (559) 447-8586 WWW.MARKTHOMAS.COM MTCO JOB NUMBER: FN-09105	DATE: 11/18/2011 SCALE: DRAWN BY: KS/MB/JL CK'D BY: GC DATE CK'D:	Revisions	Checked By	Date Checked	SHEET NO. 10 D-1 OF 90 SHEETS

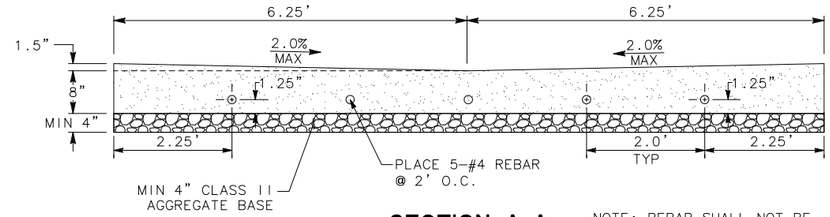

SECTION A-A

NOTE: REBAR SHALL NOT BE CONTINUOUS THROUGH EXPANSION JOINT, DOWEL THROUGH 12" POST EXPANSION JOINT. DO NOT TIE (WRAP OR GREASE END).

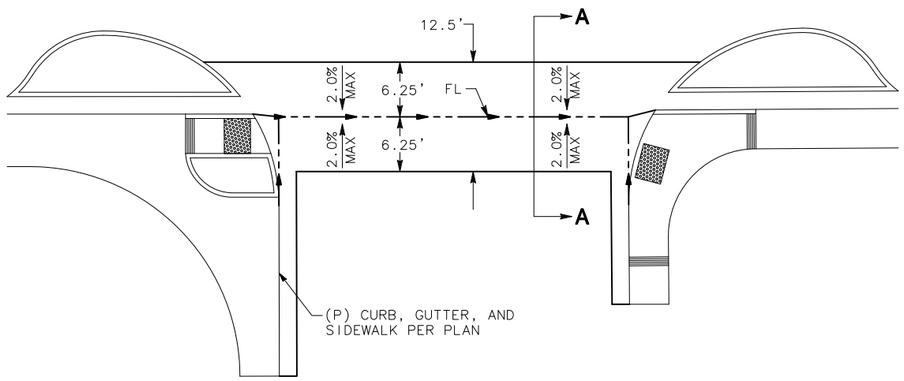

MODIFIED CROSS-GUTTER & APRON TYPE 1

NTS

12

NOTES:

1. CONCRETE FOR DRIVEWAYS SHALL BE CLASS "B"
2. CONCRETE SHALL BE CURED BY IMMEDIATE APPLICATION OF A WHITE PIGMENTED SEALING COMPOUND.
3. ALL SLOPE AREAS SHALL BE BROOM FINISHED.
4. COMMERCIAL DRIVEWAYS SHALL BE 8" THICK WITH #4 REBAR PLACED AT 24" INTERVALS. RESIDENTIAL DRIVEWAYS SHALL BE 6" THICK WITH #4 REBAR PACED AT 24" INTERVALS.
5. DRIVEWAY SHALL BE PLACED ON 4" CLASS II AGGREGATE BASE (RESIDENTIAL) OR 6" CLASS II AGGREGATE BASE (COMMERCIAL) COMPACTED TO 95% RELATIVE COMPACTION.
6. BASE SHALL BE THOROUGHLY WATERED PRIOR TO PLACING CONCRETE.

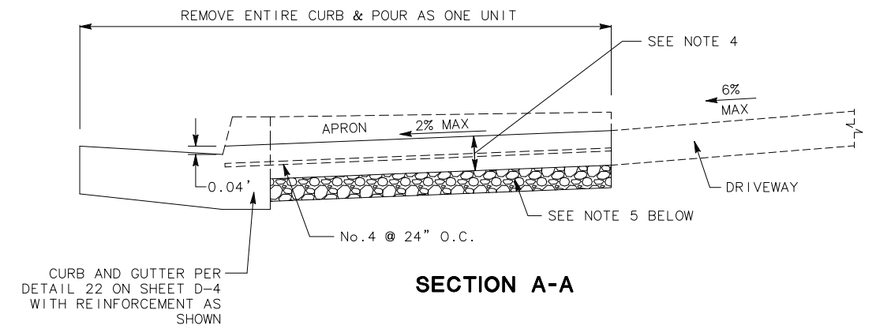

SECTION A-A

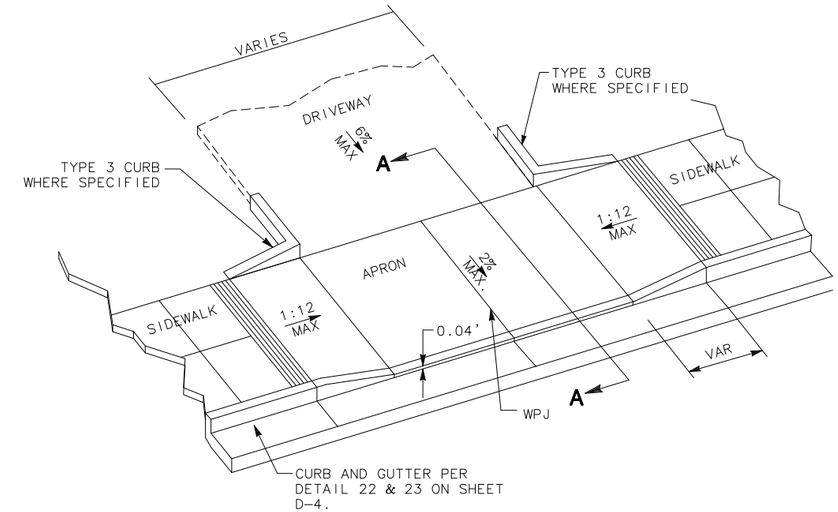

PLAN

RESIDENTIAL AND COMMERCIAL DRIVEWAY DETAIL

NTS

13

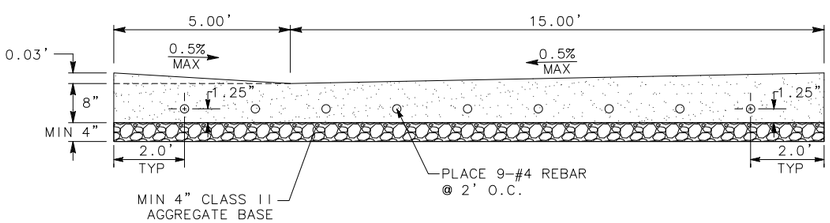

NOTE: REBAR SHALL NOT BE CONTINUOUS THROUGH EXPANSION JOINT, DOWEL THROUGH 12" POST EXPANSION JOINT. DO NOT TIE (WRAP OR GREASE END).

MODIFIED CROSS-GUTTER TYPE 2

NTS

14

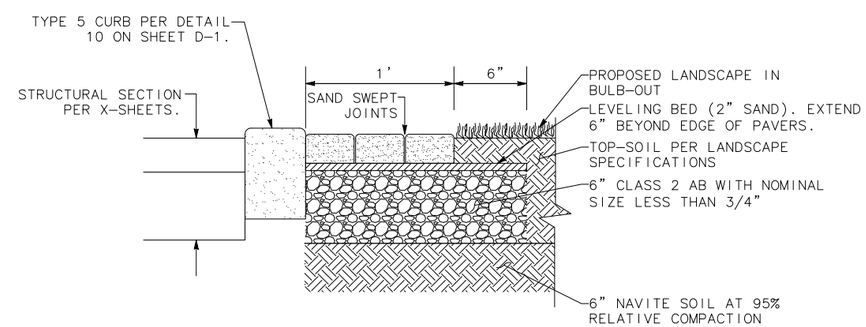

NOTE:
PAVER INSTALLATION PER MANUFACTURES RECOMMENDATIONS.

LANDSCAPE PAVER DETAIL

NTS

15

SHELF-READY PLANS - NOT FOR CONSTRUCTION

Project No.							
ST0101	CITY OF RIDGECREST W. RIDGECREST BOULEVARD RECONSTRUCTION PROJECT ROADWAY DETAILS	REGISTERED PROFESSIONAL ENGINEER EDGAR A. NORIEGA No. 61555 Exp. 6/30/13 CIVIL STATE OF CALIFORNIA	MARK THOMAS & COMPANY, INC. 7571 N REMINGTON AVENUE, SUITE 102 FRESNO, CALIFORNIA 93720 (559) 447-1938 FAX: (559) 447-8586 WWW.MARKTHOMAS.COM MTCO JOB NUMBER: FN-09105	DATE: 11/18/2011 SCALE: DRAWN BY: KS/MB/JL CK'D BY: CC DATE CK'D:	Revisions	Checked By	Date Checked	SHEET NO. 11 D-2 OF 90 SHEETS

CAD USER: ksmith
PLOT DATE: Jan 31, 2012-03:16:02pm
FILE NAME: RCB_D-1-D-9
PATH: V:\Ridgecrest - FN-09105 - Ridgecrest Blvd\CADD\Drawing\

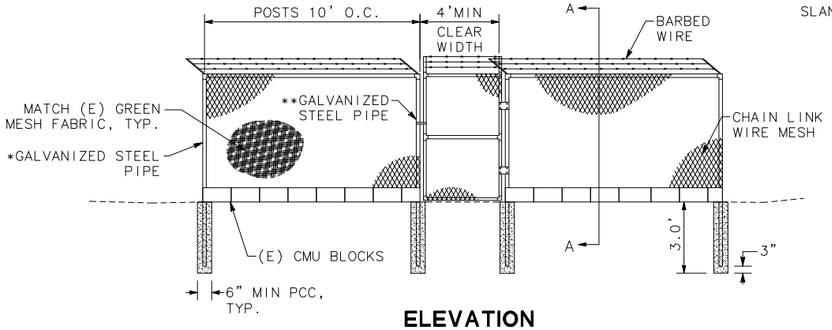

ELEVATION

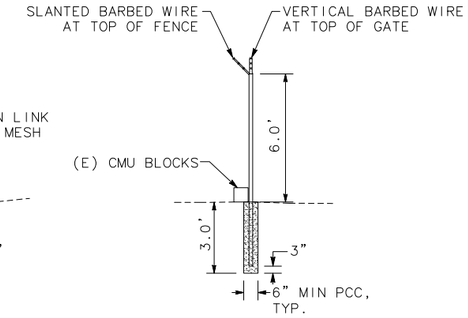

SECTION A-A

*ALL LINE POSTS SHALL BE MINIMUM 2" O.D. GALVANIZED STEEL PIPE.
**ALL GATE POSTS AND CORNER POSTS SHALL BE MINIMUM 2.5" O.D. GALVANIZED STEEL PIPE.

CHAIN LINK FENCE DETAIL

NTS

16

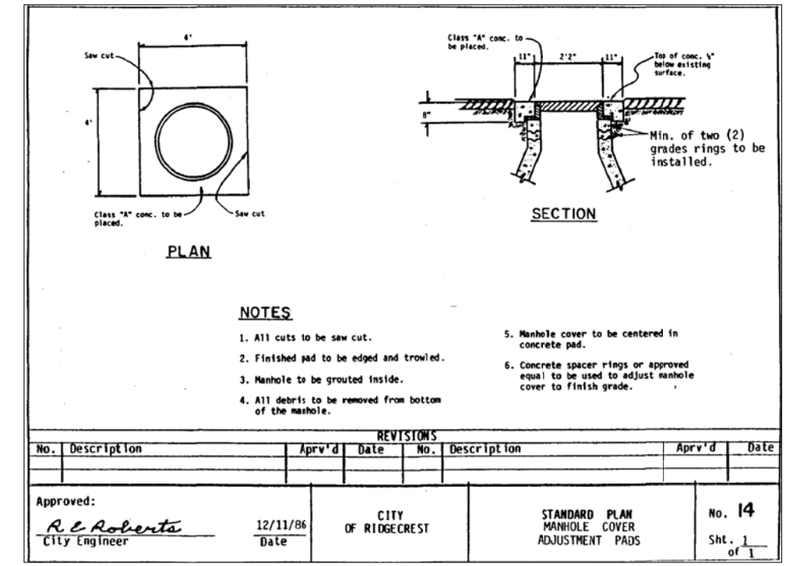

ADJUST MANHOLE TO GRADE DETAIL

NTS

17

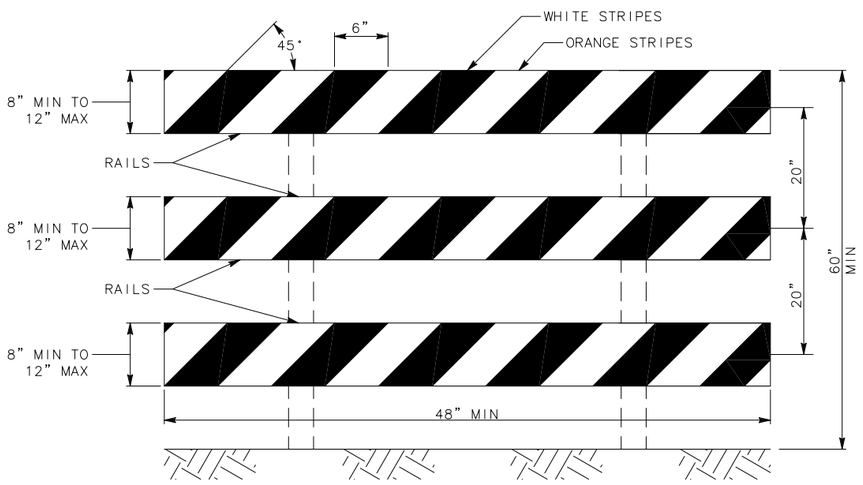

1) ALL BARRICADE STRIPES SHALL BE RETROREFLECTIVE. 3 RETROFREFLECTIVE RAIL FACES

2) BARRIER SHALL CONFORM WITH CALTRANS STANDARD SPECIFICATIONS SECTION 56-2 AND SECTION 83-2

TEMPORARY BARRICADE

NTS

18

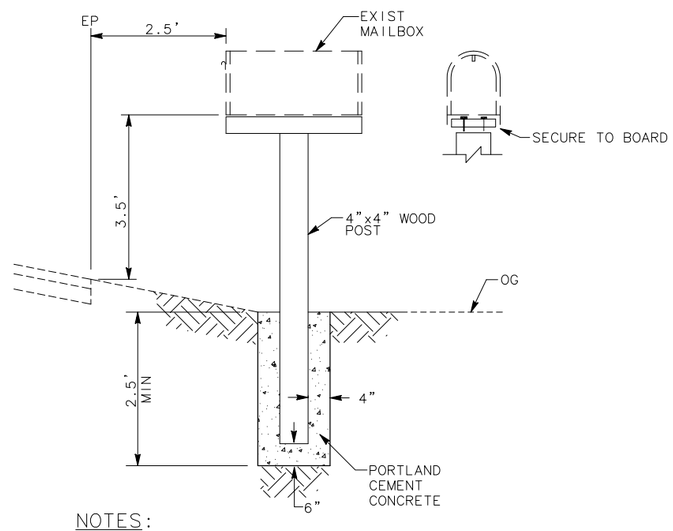

NOTES:

1. CONTRACTOR SHALL BE RESPONSIBLE FOR ACCURATELY MAINTAINING A RECORD OF MAILBOX OWNERSHIP.
2. IF ANY EXISTING MAILBOXES ARE DAMAGED OR LOST THEY SHALL BE REPLACED WITH A STANDARD POSTMASTER RURAL MAILBOX.
3. MAILBOX TO BE OPERATIONAL AND ACCESSIBLE AT ALL TIMES.

RELOCATE MAILBOX

NTS

20

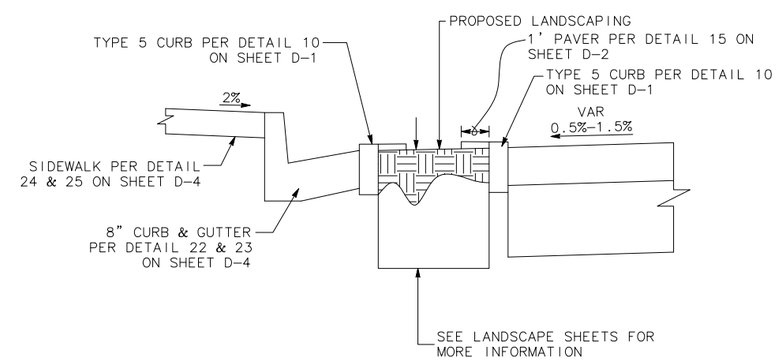

BULB-OUT DETAIL

NTS

21

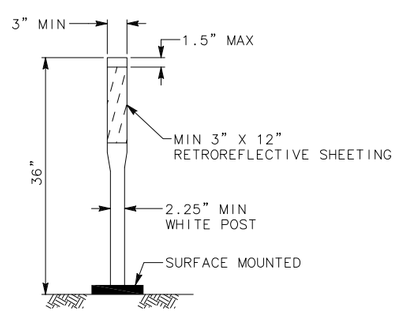

SURFACE MOUNTED CHANNELIZERS

NTS

19

SHELF-READY PLANS - NOT FOR CONSTRUCTION

Project No.							
ST0101	CITY OF RIDGECREST W. RIDGECREST BOULEVARD RECONSTRUCTION PROJECT ROADWAY DETAILS	REGISTERED PROFESSIONAL ENGINEER EDGAR A. NORIEGA No. 61555 Exp. 6/30/13 CIVIL STATE OF CALIFORNIA	MARK THOMAS & COMPANY, INC. 7571 N REMINGTON AVENUE, SUITE 102 FRESNO, CALIFORNIA 93720 (559) 447-1938 FAX: (559) 447-8586 WWW.MARKTHOMAS.COM MTCO JOB NUMBER: FN-09105	DATE: 11/18/2011 SCALE: DRAWN BY: KS/MB/JL CK'D BY: GC DATE CK'D:	Revisions	Checked By	Date Checked	SHEET NO. 12 D-3 OF 90 SHEETS

CAD USER: ksmith
PLOT DATE: Jan 31, 2012-03:16:03pm
FILE NAME: RCB_D-1-D-9
PATH: V:\Ridgecrest - FN-09105 - Ridgecrest Blvd\CADD\Drawing\

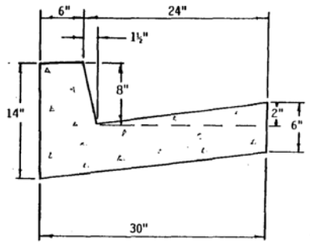

TYPE "A" (8")

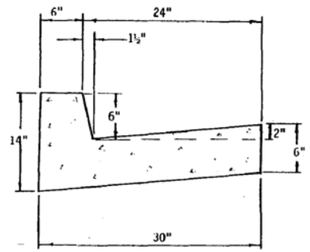

TYPE "B" (6")

See sheet 2 for standard notes.

REVISIONS							
No.	Description	Aprv'd	Date	No.	Description	Aprv'd	Date

Approved: R E Roberts, City Engineer — 12/11/86 Date | CITY OF RIDGECREST | STANDARD PLAN CURB AND GUTTER | No. 3 Sht. 1 of 2

COR CURB AND GUTTER DETAIL

NTS

22

NOTES:

1. Concrete for curbs and gutter shall be Class "B" (5 sack) and to the dimensions shown on Sheet 1.
2. Expansion joints shall be placed at ends of curb returns and 30' intervals.
3. Top and face of curb shall be troweled smooth and finished with a fine broom.
4. Gutters shall be given a broom finish with strokes parallel to the line of the gutter
5. Gutters may not vary more than 1/8" from true grade.
6. Concrete shall be cured by immediate application of a white pigmented sealing compound.
7. Subgrade and forms shall be thoroughly watered before placing concrete.

REVISIONS							
No.	Description	Aprv'd	Date	No.	Description	Aprv'd	Date

Approved: R E Roberts, City Engineer — 12/11/86 Date | CITY OF RIDGECREST | STANDARD PLAN CURB AND GUTTER | No. 3 Sht. 2 of 2

COR CURB AND GUTTER NOTES

NTS

23

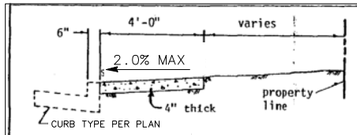

TYPE I

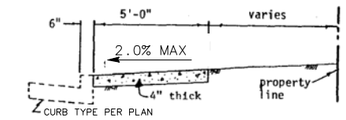

TYPE II

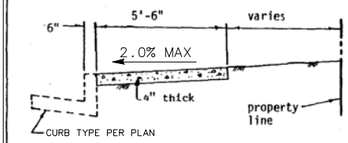

TYPE III

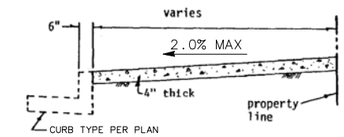

TYPE IV

See sheet 2 for standard notes.

REVISIONS							
No.	Description	Aprv'd	Date	No.	Description	Aprv'd	Date

Approved: R E Roberts, City Engineer — 12/11/86 Date | CITY OF RIDGECREST | STANDARD PLAN SIDEWALK | No. 4 Sht. 1 of 2

COR SIDEWALK DETAIL

NTS

24

NOTES:

1. Concrete for sidewalk shall be Class "B" (5 sack) and to the dimension shown on sheet 1.
2. Expanion joints shall be placed at ends of curb returns and 30' intervals.
3. SIDEWALK SHALL BE PLACED ON 6" NATIVE SOIL COMPACTED TO 95% RELATIVE COMPACTION.
4. Subgrade and forms shall be throughly watered before placing concrete.
5. Sidewalks shall be compacted with a metal grid to give a layer of mortar 3/8" thick on the surface.
6. SIDEWALKS SHALL BE FINISHED WITH A WOODEN FLOAT TO A MAXIMUM VARIATION OF 1/4" FROM THE EDGE OF A 12" STRAIGHT EDGE AND SHALL NOT EXCEED MAXIMUM SLOPES SHOWN ON PLANS.
7. Sidewalks shall be finished with a fine hair push broom traverse to the direction of traffic.
8. Concrete shall be cured by immediate application of a white pigmented sealing compound.

REVISIONS							
No.	Description	Aprv'd	Date	No.	Description	Aprv'd	Date

Approved: R E Roberts, City Engineer — 12/11/86 Date | CITY OF RIDGECREST | STANDARD PLAN SIDEWALK | No. 4 Sht. 2 of 2

COR SIDEWALK NOTES

NTS

25

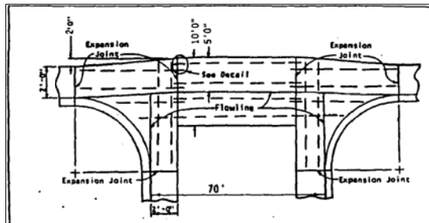

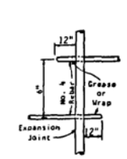

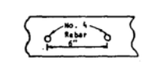

DETAIL

NOTE: Rebar shall not be continuous through expansion joint, dowel through 12" past expansion joint. Do not tie (wrap or grease end)

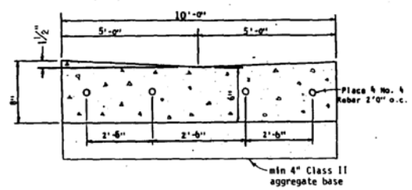

See standard cross-gutter sheet for areas. Sheet 1 of 5

REVISIONS							
No.	Description	Aprv'd	Date	No.	Description	Aprv'd	Date

Approved: R E Roberts, City Engineer — 12/11/86 Date | CITY OF RIDGECREST | STANDARD PLAN 10' CROSS - GUTTER & APRONS | No. 7 Sht. 4 of 5

COR CROSS GUTTER DETAIL

NTS

26

NOTES:

1. Expansion joints shall be in place before concrete is poured.
2. Existing concrete shall be saw cut before being joined or repaired.
3. All concrete shall be Class "B" (5 sack).
4. All concrete shall be poured to line and grade as shown. All gutter surface shall be given a broom finish with strokes parallel to the gutter line.
5. BASE GRADE SHALL HAVE 6 IN NATIVE SOIL COMPACTED TO 95% RELATIVE COMPACTION.
6. Base and forms shall be throughly watered before placing concrete.
7. Concrete shall be cured by immediate application of a white pigmented sealing compound.
8. All rebar shall be supported by using precast mortarblocks or ferrous metal chairs or other approved devices of sufficient strength to resist crushing under applied loads.
9. Cross gutter and apron shall be placed on a minimum of 4" Class II aggregate base.

REVISIONS							
No.	Description	Aprv'd	Date	No.	Description	Aprv'd	Date

Approved: R E Roberts, City Engineer — 12/11/86 Date | CITY OF RIDGECREST | STANDARD PLAN CROSS - GUTTER & APRONS | No. 7 Sht. 1 of 5

COR CROSS-GUTTER NOTES

NTS

27

SHELF-READY PLANS - NOT FOR CONSTRUCTION

Project No.							
ST0101	CITY OF RIDGECREST W. RIDGECREST BOULEVARD RECONSTRUCTION PROJECT ROADWAY DETAILS	REGISTERED PROFESSIONAL ENGINEER EDGAR A. NORIEGA No. 61555 Exp. 6/30/13 CIVIL STATE OF CALIFORNIA	MARK THOMAS & COMPANY, INC. 7571 N REMINGTON AVENUE, SUITE 102 FRESNO, CALIFORNIA 93720 (559) 447-1938 FAX: (559) 447-8586 WWW.MARKTHOMAS.COM MTCO JOB NUMBER: FN-09105	DATE: 11/18/2011 SCALE: DRAWN BY: KS/MB/JL CK'D BY: CG DATE CK'D:	Revisions	Checked By	Date Checked	SHEET NO. 13 D-4 OF 90 SHEETS

CAD USER: ksmith
PLOT DATE: Jan 31, 2012-03:16:10pm
FILE NAME: RCB_D-1-D-9
PATH: V:\Ridgecrest - FN-09105 - Ridgecrest Blvd\CADD\Drawing\

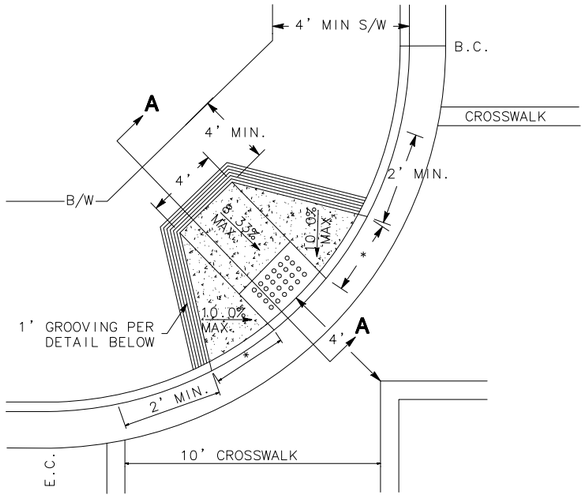

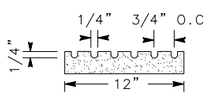

GROOVING DETAIL

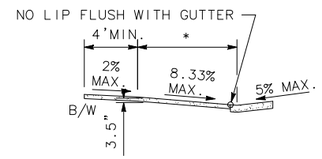

SECTION A - A

* TO BE DETERMINED BY FLARE SLOPE, CURBFACE HEIGHT AND SLOPE AROUND RETURN.

NOTES:

1. TRANSITIONS FROM RAMP AND LANDING TO WALK, GUTTERS OR STREETS SHALL BE FLUSH AND FREE OF ABRUPT CHANGES.
2. SURFACE OF CURB RAMP AND FLARED SIDES SHALL HAVE BROOM FINISH TRANSVERSE TO PATH OF TRAVEL AND SHALL BE OF CONTRASTING FINISH TO THAT OF ADJACENT SIDEWALK.
3. RAMP SLOPE SHALL NEVER EXCEED 8.33%.
4. WHEN THE RAMP HAS A SLOPE LESS THAN 1:15 (6.7% SLOPE), DETECTABLE WARNING DEVICES SHALL BE REQUIRED ON THE FULL WIDTH AND DEPTH OF RAMP WITHIN THE GROOVED BORDERS, EXCLUDING THE FLARED SIDES, PER CHAPTER 11B OF THE CALIFORNIA BUILDING CODE.
5. THE SLOPE OF ADJOINING GUTTERS, ROAD SURFACE OR ACCESSIBLE ROUTE WITHIN 4' OF THE BOTTOM OF THE RAMP SHALL NOT EXCEED 5% SLOPE.
6. THERE SHALL BE A SEGMENT OF STRAIGHT CURB. AT LEAST 24" LONG ON EACH SIDE OF THE CURB RAMP. THESE CURBS SHALL ALSO BE WITHIN THE MARKED CROSSWALK.
7. PROVIDE GROOVED BORDER 12" WIDE AT THE LEVEL SURFACE OF THE SIDEWALK ALONG THE TOP AND EACH SIDE APPROX. 3/4" ON CENTER, 1/4" DEEP; 1/4" WIDE.
8. PROVIDE LEVEL LANDING OF AT LEAST 48" ON UPPER END AND OVER FULL WIDTH OF RAMP.
9. THE 4' CLEAR SPACE AT BOTTOM OF RAMP SHALL BE WITHIN THE MARKED CROSSINGS.
10. RAMP SHALL BE MINIMUM OF 4' WIDE AND SHALL LIE GENERALLY IN A SINGLE SLOPED PLANE WITH A MINIMUM OF SURFACE WARPING AND CROSS SLOPE.
11. THE FLARED SIDE SHALL NOT EXCEED 10% SLOPE.
12. THE DETECTABLE WARNING SHALL CONTRAST VISUALLY WITH ADJOINING SURFACES,EITHER LIGHT ON DARK OR DARK ON LIGHT. THE MATERIAL USED SHALL BE AN INTEGRAL PART OF THE WALKING SURFACE.

DIAGONAL CURB RAMP

NTS

28

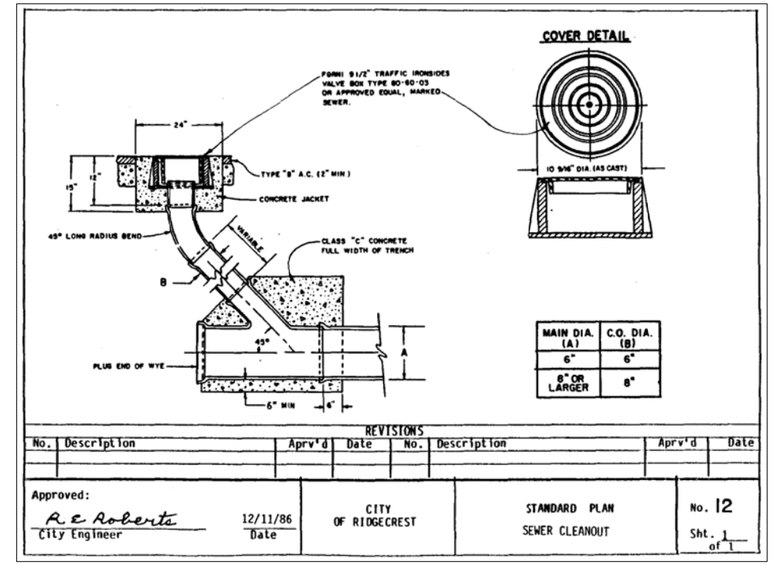

MAIN DIA. (A)	C.O. DIA. (B)
6"	6"
8" OR LARGER	8"

REVISIONS

No.	Description	Aprv'd	Date	No.	Description	Aprv'd	Date

Approved: R E Roberts, City Engineer — 12/11/86 Date | CITY OF RIDGECREST | STANDARD PLAN SEWER CLEANOUT | No. 12 | Sht. 1 of 1

COR STANDARD SEWER CLEANOUT

NTS

29

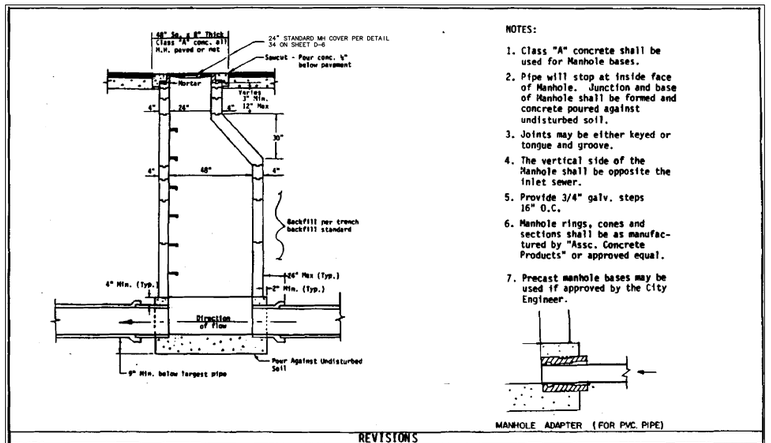

NOTES:

1. Class "A" concrete shall be used for Manhole bases.
2. Pipe will stop at inside face of Manhole. Junction and base of Manhole shall be formed and concrete poured against undisturbed soil.
3. Joints may be either keyed or tongue and groove.
4. The vertical side of the Manhole shall be opposite the inlet sewer.
5. Provide 3/4" galv. steps 16" O.C.
6. Manhole rings, cones and sections shall be as manufactured by "Assc. Concrete Products" or approved equal.
7. Precast manhole bases may be used if approved by the City Engineer.

REVISIONS

No.	Description	Aprv'd	Date	No.	Description	Aprv'd	Date

Approved: R E Roberts, City Engineer — 12/11/86 Date | CITY OF RIDGECREST | STANDARD PLAN MANHOLE | No. 11 | Sht. 1 of 2

COR STANDARD MANHOLE DETAIL

NTS

30

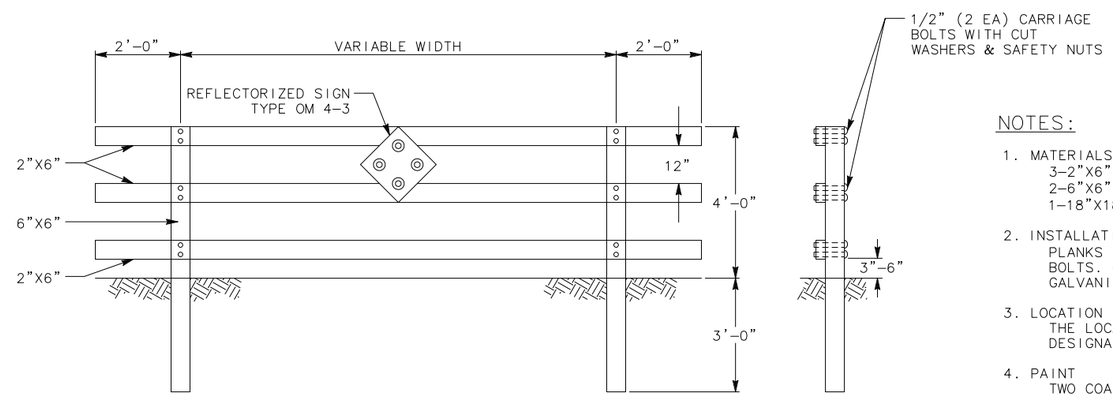

NOTES:

1. MATERIALS
   3-2"X6"X16' WOOD PLANKS - TREATED DOUGLAS FIR
   2-6"X6"X7' WOOD POSTS - TREATED DOUGLAS FIR
   1-18"X18" TYPE N (RED) REFLECTORIZED SIGN
2. INSTALLATION
   PLANKS SHALL BE FASTENED TO POSTS WITH 5/16" CARRIAGE BOLTS. CUT WASHERS AND SAFETY NUTS. ALL HARDWARE GALVANIZED.
3. LOCATION
   THE LOCATION SHALL BE AS SHOWN ON THE PLANS OR DESIGNATED BY THE ENGINEER.
4. PAINT
   TWO COATS OF EXTERIOR GRADE WHITE PAIN CONFORMING TO CALTRANS STANDARD SPECIFICATIONS SECTION 91-3.02 SHALL BE APPLIED TO ALL EXPOSED WOOD SURFACES.

PERMANENT BARRICADE

NTS

31

SHELF-READY PLANS - NOT FOR CONSTRUCTION

Project No.							
ST0101	CITY OF RIDGECREST W. RIDGECREST BOULEVARD RECONSTRUCTION PROJECT ROADWAY DETAILS	REGISTERED PROFESSIONAL ENGINEER EDGAR A. NORIEGA No. 61555 Exp. 6/30/13 CIVIL STATE OF CALIFORNIA	MARK THOMAS & COMPANY, INC. 7571 N REMINGTON AVENUE, SUITE 102 FRESNO, CALIFORNIA 93720 (559) 447-1938 FAX: (559) 447-8586 WWW.MARKTHOMAS.COM MTCO JOB NUMBER: FN-09105	DATE: 11/18/2011 SCALE: DRAWN BY: KS/MB/JL CK'D BY: CG DATE CK'D:	Revisions	Checked By	Date Checked	SHEET NO. 14 D-5 OF 90 SHEETS

FILE NAME: RCB_D-1-D-9 PLOT DATE: Jan 31, 2012-03:16:12pm CAD USER: ksmith
PATH: V:\Ridgecrest - FN-09105 - Ridgecrest Blvd\CADD\Drawing\

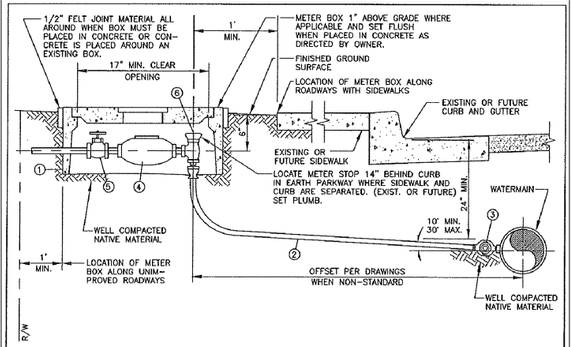

ITEM	NO. REQ'D.	DESCRIPTION	APPROVED MATERIALS LIST No.
1	1	METER BOX WITH COVER AND READING LID.	E-01
2	1	1" TYPE "K" SOFT COPPER TUBING WITH NO SPLICES AND LEAD-FREE FITTINGS.	
3	1	1" LEAD-FREE CORP STOP	
4	1	1" OR 3/4" METER (AS DIRECTED BY DISTRICT)	H-15
5	1	1" GATE VALVE WITH THREADED ENDS AND HANDWHEEL	B-10
6	1	1" LEAD-FREE ANGLE METER STOP	

NOTES

1) WHERE SERVICES ARE PLACED TO ADJACENT PROPERTIES, LOCATION OF SERVICES SHALL BE PER DETAIL "A" OR AS DIRECTED BY DISTRICT.
2) COPPER SERVICE PIPING SHALL NOT BE "SNAKED" IN THE TRENCH BUT LAID STRAIGHT AND AT RIGHT ANGLES TO THE MAIN.
3) PIPE THREADS SHALL BE CLEAN AND SHARP AND SEALED WITH AN APPROVED JOINT COMPOUND.
4) DAMAGE TO SERVICE, METER OR BOX, OR IMPROPER PLACEMENT THEREOF, SHALL BE REPAIRED BY CONTRACTOR/CUSTOMER, AT HIS/HER EXPENSE, UNTIL EXPIRATION OF CONTRACTOR/CUSTOMER WARRANTY.
5) COPPER TUBING SHALL BE WRAPPED WITH SPECIALTY PRODUCTS 4 MIL PLASTIC SLEEVE.
6) SERVICE SADDLE TO BE BRASS SINGLE OR DOUBLE STRAP.

INDIAN WELLS VALLEY WATER DISTRICT

____ SUBMITTED R.C.E. ____	SERVICE INSTALLATION DETAIL (SINGLE 1" DIA.)	STANDARD DRAWING
APPROVED ____ DATE	DRAFT	P-18

IWVWD SERVICE INSTALLATION DETAIL

NTS

32

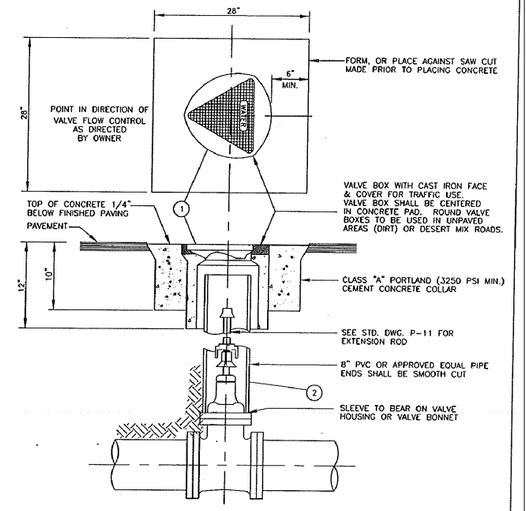

ITEM	NO. REQ'D.	DESCRIPTION	APPROVED MATERIALS LIST No.
1	1	TRAFFIC BOX COVER MARKED "WATER". COVERS FOR FIRE HYDRANT INSTALLATIONS SHALL BE PAINTED PER DISTRICT APPROVED PAINT SYSTEMS.	E-04
2	1	8" I.D. AWWA C900, CLASS 150 PVC PIPE.	A-05

INDIAN WELLS VALLEY WATER DISTRICT

CHARLES A. KRIEGER SUBMITTED R.C.E. 44545	VALVE BOX INSTALLATION DETAIL (HOT MIX A.C. STREETS ONLY)	STANDARD DRAWING
BOARD OF DIRECTORS APPROVED November 13, 1995 DATE	KRIEGER & STEWART ENGINEERING CONSULTANTS RIVERSIDE, CALIFORNIA	P-11A

IWVWD VALVE BOX INSTALLATION DETAIL

NTS

33

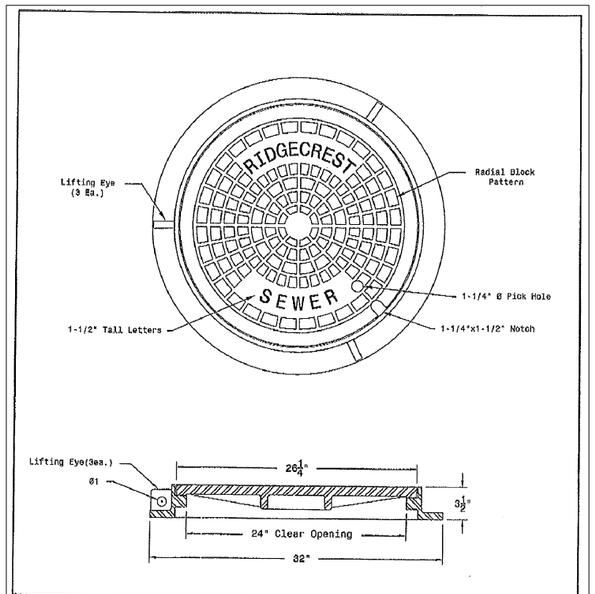

Alhambra Foundry Co. Ltd.
1147 Meridian Avenue - Alhambra, CA 91803 - Phone:(626)289-4294 Fax:(626)289-3078

DATE: 12-9-09	MATERIAL: Cast Iron	Description: 24"dia. Manhole Cover & Frame
DRAWN BY: KM	WEIGHT: Cover:155# Frame:165#	
CUSTOMER:	FINISH: Bituminous Paint	Part No. A-1254-4
JOB NUMBER:	NO.REQUIRED:	

24" DIA. MANHOLE COVER AND FRAME

NTS

34

1. CONCRETE FOR DRIVEWAYS SHALL BE CLASS "B"
2. CONCRETE SHALL BE CURED BY IMMEDIATE APPLICATION OF A WHITE PIGMENTED SEALING COMPOUND.
3. ALL SLOPE AREAS SHALL BE BROOM FINISHED.
4. DRIVEWAY SHALL BE 8" THICK PORTLAND CEMENT CONCRETE.
5. #4 REBAR SHALL BE PLACED AT 24" INTERVALS SUCH THAT IT HAS 3" COVER FROM BOTTOM OF DRIVEWAY SECTION.
6. DRIVEWAY SHALL BE PLACED ON 6" CLASS II AGGREGATE BASE COMPACTED TO 95% RELATIVE COMPACTION.
7. BASE SHALL BE THOROUGHLY WATERED PRIOR TO PLACING CONCRETE.

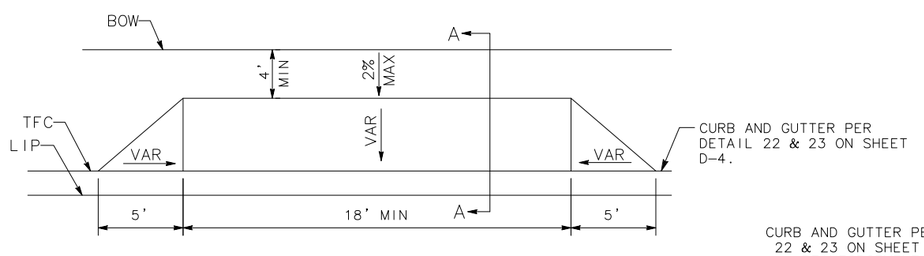

MODIFIED COMMERCIAL DRIVEWAY

NTS

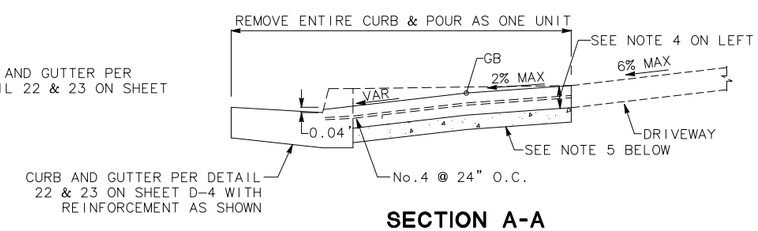

SECTION A-A

35

SHELF-READY PLANS - NOT FOR CONSTRUCTION

Project No.							
ST0101	CITY OF RIDGECREST W. RIDGECREST BOULEVARD RECONSTRUCTION PROJECT ROADWAY DETAILS	REGISTERED PROFESSIONAL ENGINEER EDGAR A. NORIEGA No. 61555 Exp. 6/30/13 CIVIL STATE OF CALIFORNIA	MARK THOMAS & COMPANY, INC. 7571 N REMINGTON AVENUE, SUITE 102 FRESNO, CALIFORNIA 93720 (559) 447-1938 FAX: (559) 447-8586 WWW.MARKTHOMAS.COM MTCO JOB NUMBER: FN-09105	DATE: 11/18/2011 SCALE: DRAWN BY: KS/MB/JL CK'D BY: GC DATE CK'D:	Revisions	Checked By	Date Checked	SHEET NO. 15 D-6 OF 90 SHEETS

CAD USER: ksmith
PLOT DATE: Jan 31, 2012-03:16:13pm
FILE NAME: RCB_D-1-D-9
PATH: V:\Ridgecrest - FN-09105 - Ridgecrest Blvd\CADD\Drawing\

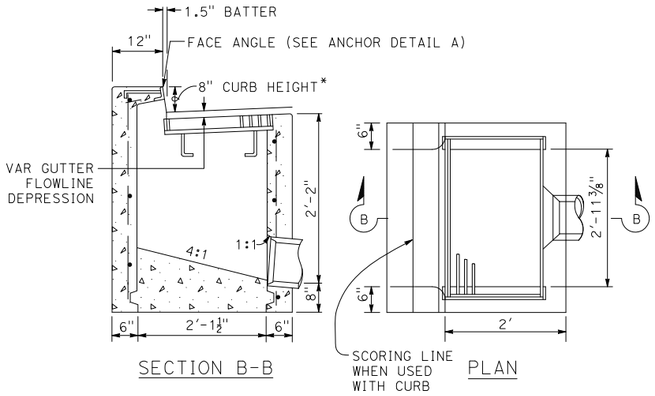

TYPE GO

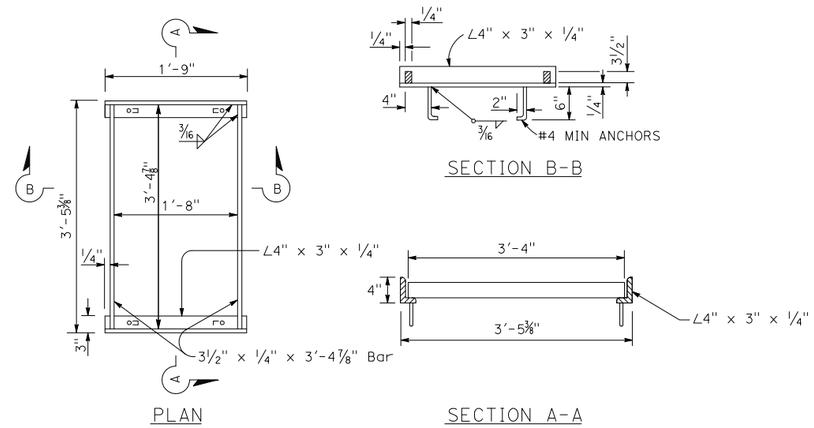

RECTANGULAR FRAME DETAILS
(For all rectangular grates)

INLET NOTES:

1. PIPE(S) CAN BE PLACED IN ANY WALL.
2. CURB SECTION SHALL MATCH ADJACENT CURB.
3. BASIN FLOORS SHALL HAVE WOOD TROWEL FINISH AND SHALL SLOPE TOWARD THE OUTLET PIPE AS SHOWN.
4. GALVANIZING - SEE CALTRANS STANDARD SPECIFICATIONS OR SPECIAL PROVISIONS.
5. SEE CALTRANS STANDARD PLAN D77A AND D77B FOR GRATE AND FRAME WEIGHTS OF MISCELLANEOUS IRON AND STEEL.
6. FULL PENETRATION BUTT WELDS MAY BE SUBSTITUTED FOR THE FILLET WELDS ON ALL ANCHORS.
7. STANDARD SQUARE, HEXAGON, ROUND OR EQUIVALENT HEADED ANCHORS MAY BE SUBSTITUTED FOR THE RIGHT ANGLE HOOKS ON THE ANCHORS SHOWN ON THIS PLAN.
8. CAST-IN-PLACE OR PRECAST ALTERNATIVE IS OPTIONAL WITH CONTRACTOR.
9. THE GUTTER DEPRESSION SHALL BE 1-1/4" TO 3" IN CITY STREET GUTTERS.
10. ESTABLISH CURB OPENING HEIGHT AT MIDPOINT OF GRATE.
11. CAST-IN-PLACE INLETS TO BE FORMED AROUND ALL PIPES/STUBS INTERSECTING THE INLET AND CONCRETE POURED IN ONE CONTINUOUS OPERATION. PRECAST INLETS SHALL HAVE MORTARED PIPE CONNECTIONS CONFORMING TO DETAILS FOR TYPE GCP INLETS ON CALTRANS STANDARD PLAN D75B. SEE STANDARD SPECIFICATIONS FOR MORTAR COMPOSITION.

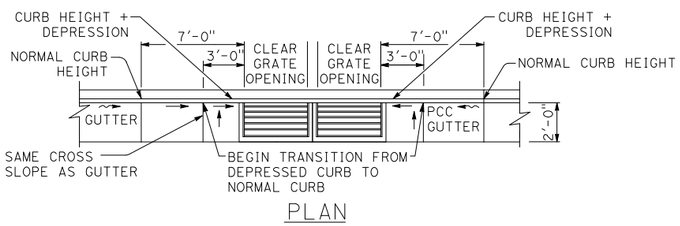

PLAN

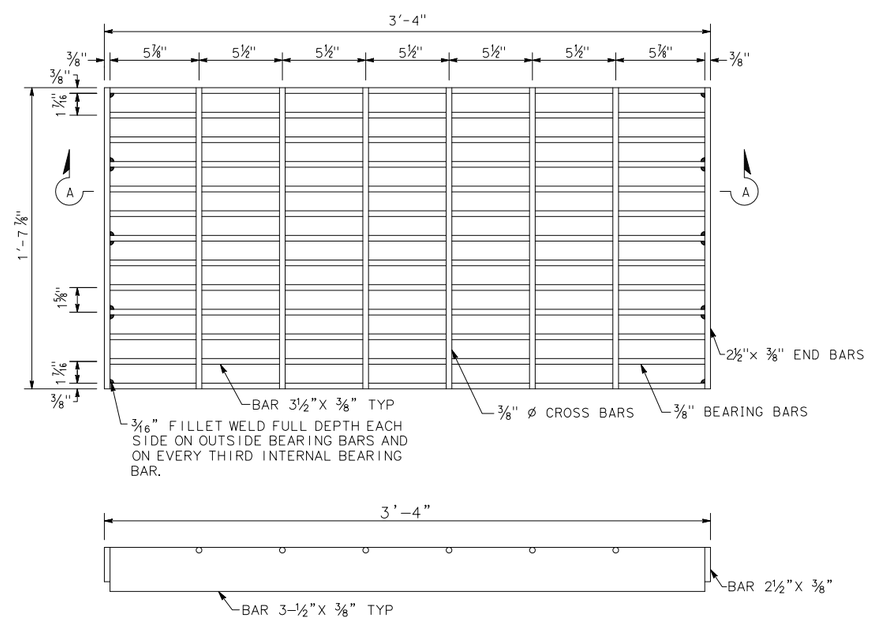

GRATE DETAIL

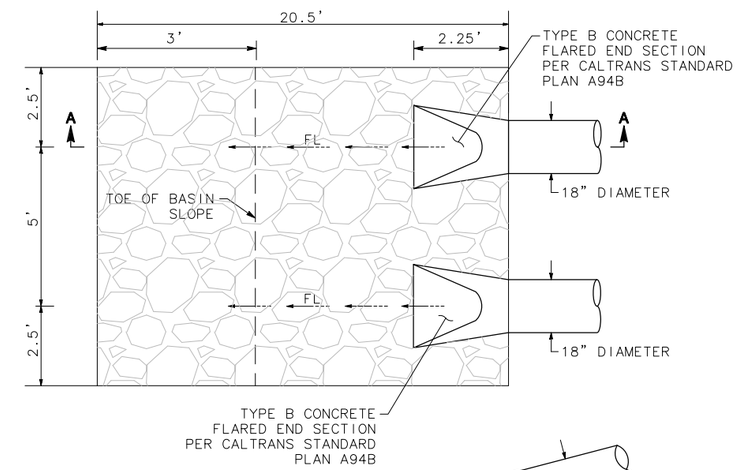

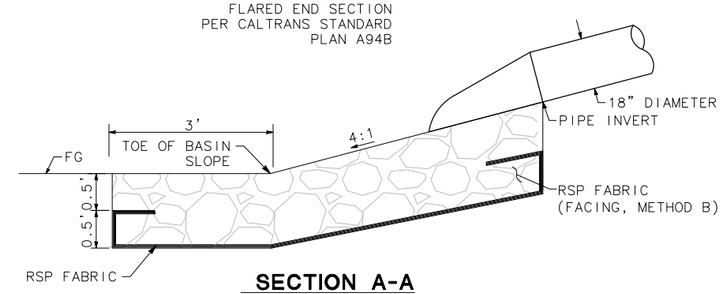

SECTION A-A

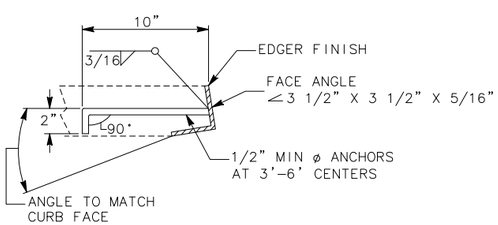

FACE ANGLE ANCHOR DETAIL A

* SUPPLY 2 ANCHORS PER INLET

GRATE NOTES:

1. BEARING BARS TO BE 3 1/2" X 3/8" BARS ON 1 5/8" CENTERS.
2. 3/8"± ø CROSS BARS MAY BE FILLET WELDED, RESISTANCE WELDED OR ELECTROFORGED TO BEARING BARS.
3. CONTRACTOR HAS THE OPTION OF USING CAST NODULAR IRON, CAST STEEL, WELDED, BOLTED, OR CAST END BLOCK GRATE.
4. ROUNDED TOP OF BARS OPTIONAL ON ALL GRATES.
5. PIPE INLETS WITH A GRATE SHALL BE PLACED SO THAT BARS PARALLEL DIRECTION OF PRINCIPLE SURFACE FLOW.

TYPE GO INLET DETAIL
NTS
36

ROCK SLOPE PROTECTION OUTFALL INTO RETENTION BASIN
NTS
37

SHELF-READY PLANS - NOT FOR CONSTRUCTION

Project No.							
ST0101	CITY OF RIDGECREST W. RIDGECREST BOULEVARD RECONSTRUCTION PROJECT ROADWAY DETAILS	REGISTERED PROFESSIONAL ENGINEER EDGAR A. NORIEGA No. 61555 Exp. 6/30/13 CIVIL STATE OF CALIFORNIA	MARK THOMAS & COMPANY, INC. 7571 N REMINGTON AVENUE, SUITE 102 FRESNO, CALIFORNIA 93720 (559) 447-1938 FAX: (559) 447-8586 WWW.MARKTHOMAS.COM MTCO JOB NUMBER: FN-09105	DATE: 11/18/2011 SCALE: DRAWN BY: KS/MB/JL CK'D BY: CG DATE CK'D:	Revisions	Checked By	Date Checked	SHEET NO. 16 D-7 OF 90 SHEETS

CAD USER: ksmith
PLOT DATE: Jan 31, 2012-03:16:15pm
FILE NAME: RCB_D-1-D-9
PATH: V:\Ridgecrest - FN-09105 - Ridgecrest Blvd\CADD\Drawing\

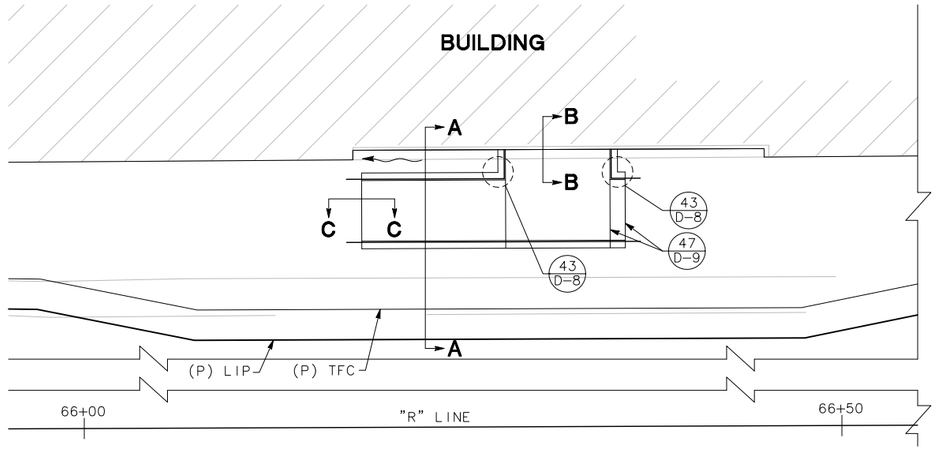

RIDGECREST BOULEVARD
STA 65+95 TO STA 66+55

SCALE: 1"=5'

38

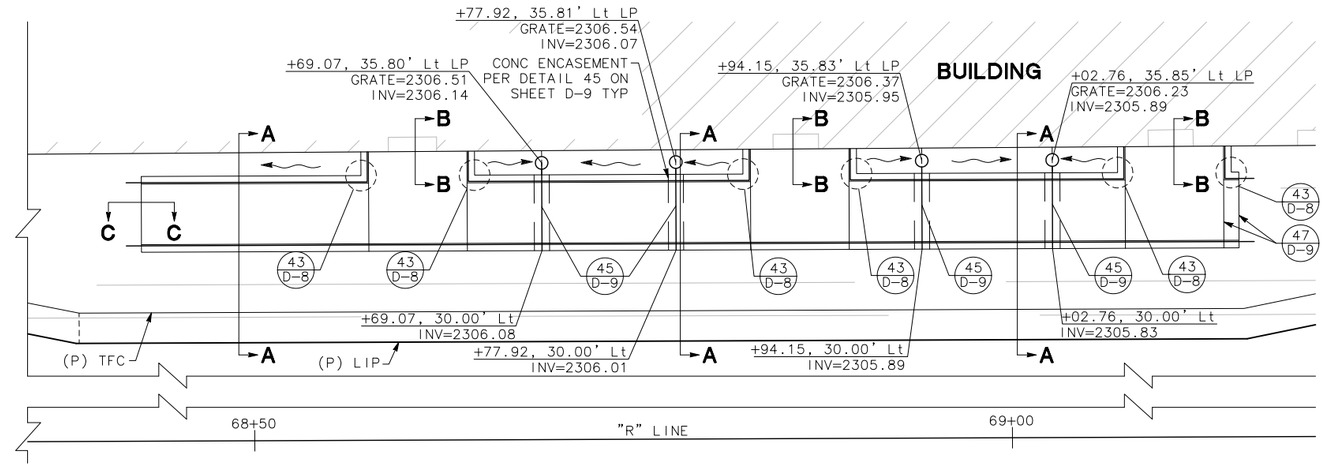

RIDGECREST BOULEVARD
STA 68+35 TO STA 69+20

SCALE: 1"=5'

39

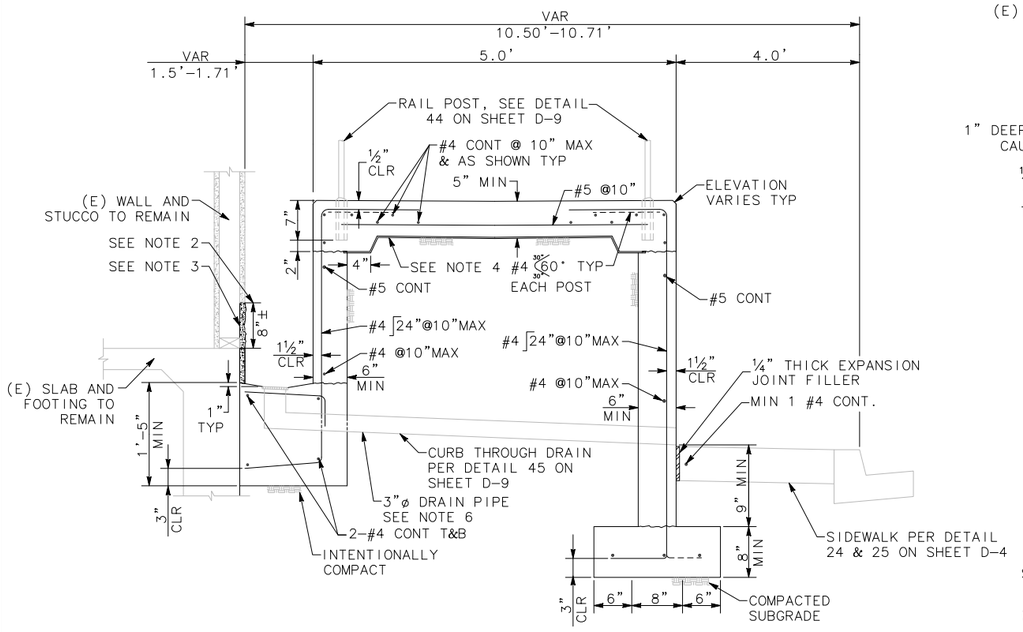

SECTION A-A

NTS

40

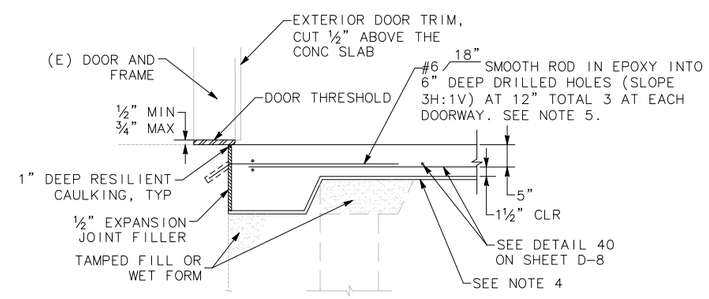

SECTION B-B

NTS

41

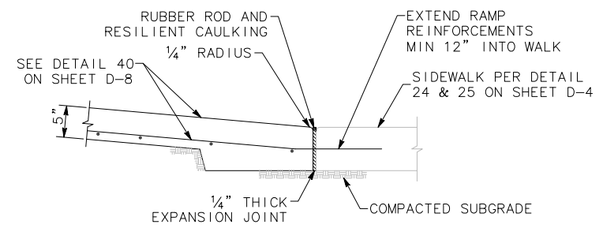

SECTION C-C

NTS

42

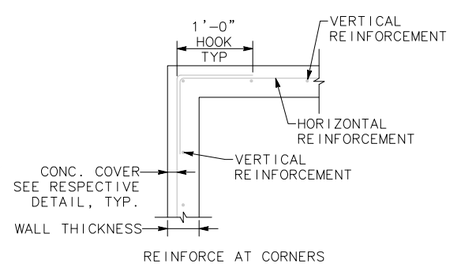

DETAIL A (PLAN)

NTS

43

NOTES:

1. CONTRACTOR SHALL VERIFY ALL CONTROLLING FIELD DIMENSIONS AND AS-BUILT CONDITIONS BEFORE ORDERING OR FABRICATING ANY MATERIAL.
2. SAWCUT STRAIGHT, ½" DEEP AND REMOVE EXISTING STUCCO BELOW SO AS NOT TO DAMAGE EXISTING BUILDING PAPER OR THE FRAMING.
3. CONTRACTOR TO REMOVE AND INSTALL NEW BUILDING PAPER, DRIP STRIP, WIRE MESH, AND STUCCO TO THE BOTTOM 8"+/- OF EXISTING STUCCO AND NEWLY EXPOSED AREAS SO AS TO MATCH EXISTING AND ASSURE FULL WATERPROOFING. ALL STUCCO REMOVAL AND INSTALLATION SHALL BE DONE PER INDUSTRY STANDARDS.
4. THE SPACE BETWEEN WALLS UNDER THE RAMP SHALL BE EITHER FORMED WITH THE FORMS TO STAY OR BE FILLED AND TAMPED FOR CONCRETE RAMP POUR SO AS NOT TO SETTLE. IN CASE FILL IS USED, A MOISTURE BARRIER SHALL BE USED AS SHOWN.
5. EPOXY FOR DOWELS SHALL BE 'SIMPSON SET' OR APPROVED EQUAL. DRILL HOLE SIZE AND INSTALLATION OF DOWELS SHALL BE PER EPOXY MANUFACTURER'S RECOMMENDATIONS. ALL EPOXY DOWEL INSTALLATIONS SHALL BE UNDER CONTINUOUS INSPECTION BY A 'SPECIAL INSPECTOR' PER CBC 2007, CHAPTER 17.
6. AREA DRAIN WITH PIPE AND GRATING SHALL BE INSTALLED AS SHOWN AND BE DAY-LIGHTED AT BACK OF WALK. THERE SHALL BE MINIMUM TWO DRAIN PER POCKET CREATED BY THE RAMP CONSTRUCTION. THE EXISTING DOWNSPOUT SHALL BE EXTENDED WITH SIMILAR DRAIN PIPE INDEPENDENT OF THE AREA DRAINS. A SCORED JOINT IS TO BE ADDED TO CONCRETE SIDEWALK ALONG THE DRAIN PIPE.

SHELF-READY PLANS - NOT FOR CONSTRUCTION

Project No.							
ST0101	CITY OF RIDGECREST W. RIDGECREST BOULEVARD RECONSTRUCTION PROJECT ROADWAY DETAILS	REGISTERED PROFESSIONAL ENGINEER EDGAR A. NORIEGA No. 61555 Exp. 6/30/13 CIVIL STATE OF CALIFORNIA	MARK THOMAS & COMPANY, INC. 7571 N REMINGTON AVENUE, SUITE 102 FRESNO, CALIFORNIA 93720 (559) 447-1938 FAX: (559) 447-8586 WWW.MARKTHOMAS.COM MTCO JOB NUMBER: FN-09105	DATE: 11/18/2011 SCALE: DRAWN BY: KS/MB/JL CK'D BY: CG DATE CK'D:	Revisions	Checked By	Date Checked	SHEET NO. 17 D-8 OF 90 SHEETS

CAD USER: ksmith
PLOT DATE: Jan 31, 2012-03:16:18pm
FILE NAME: RCB_D-1-D-9
PATH: V:\Ridgecrest - FN-09105 - Ridgecrest Blvd\CADD\Drawing\

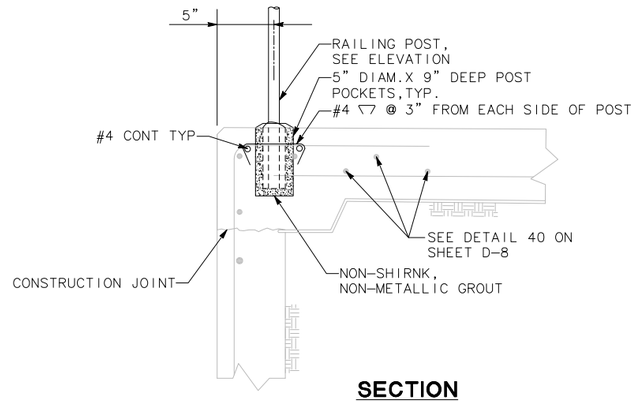

SECTION
NO SCALE

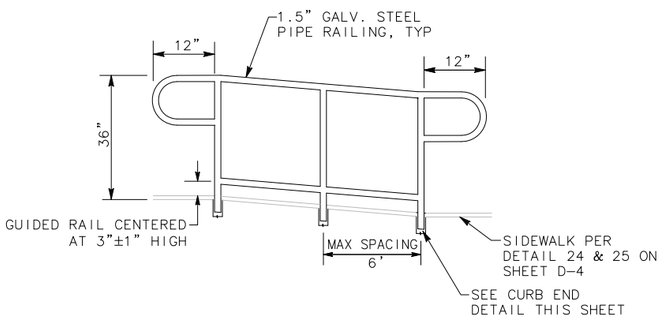

ELEVATION
NO SCALE

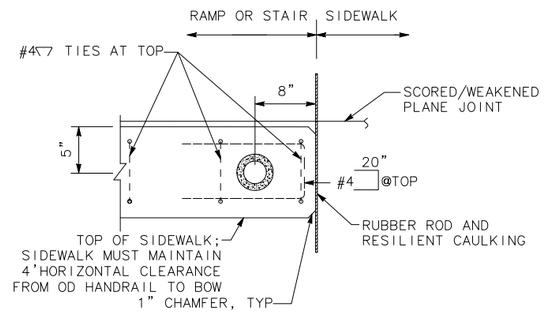

PLAN
CURB END DETAIL
NO SCALE

HANDRAIL DETAIL
NTS
44

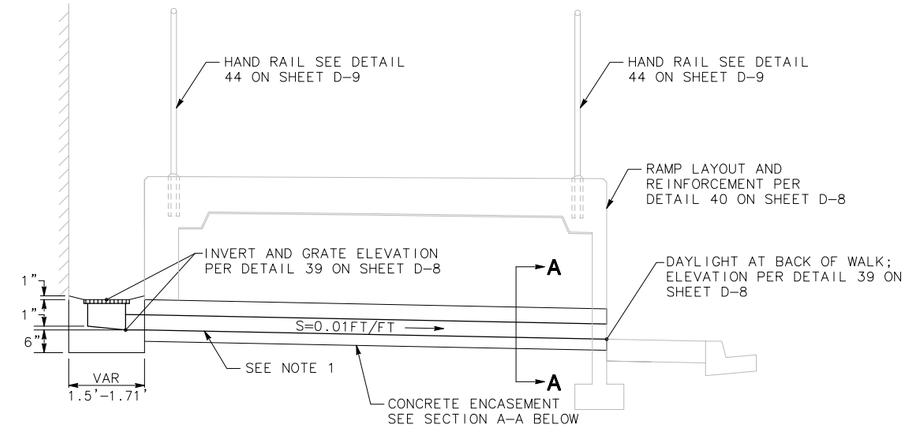

ELEVATION

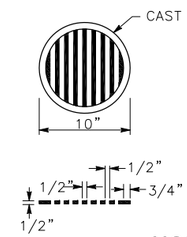

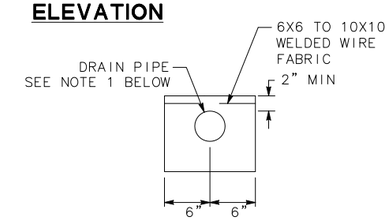

SECTION A-A

NOTES:
1. PIPE SHALL BE 3" DIAMETER NON-BELL SCHEDULE 80 PVC.

CURB THROUGH DRAIN
NTS
45

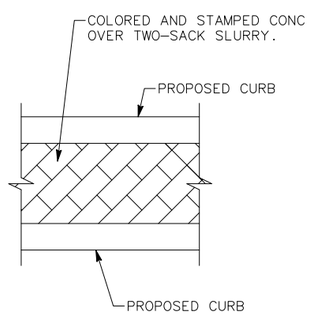

COLORED STAMPED CONCRETE DETAIL
NTS
46

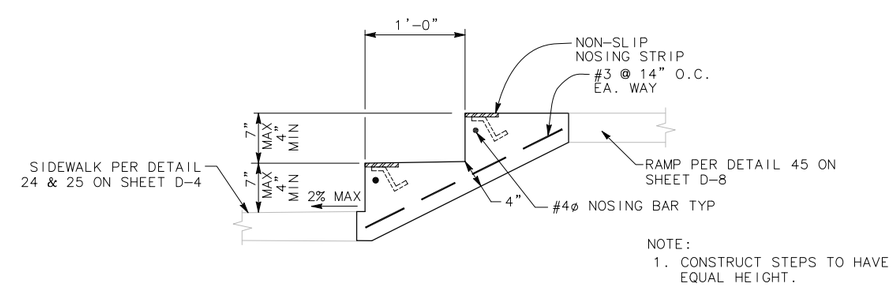

NOTE:
1. CONSTRUCT STEPS TO HAVE EQUAL HEIGHT.

CONCRETE STAIRS
NTS
47

SHELF-READY PLANS - NOT FOR CONSTRUCTION

Project No.							
ST0101	CITY OF RIDGECREST W. RIDGECREST BOULEVARD RECONSTRUCTION PROJECT ROADWAY DETAILS	REGISTERED PROFESSIONAL ENGINEER EDGAR A. NORIEGA No. 61555 Exp. 6/30/13 CIVIL STATE OF CALIFORNIA	MARK THOMAS & COMPANY, INC. 7571 N REMINGTON AVENUE, SUITE 102 FRESNO, CALIFORNIA 93720 (559) 447-1938 FAX: (559) 447-8586 WWW.MARKTHOMAS.COM MTCO JOB NUMBER: FN-09105	DATE: 11/18/2011 SCALE: DRAWN BY: KS/MB/JL CK'D BY: CC DATE CK'D:	Revisions	Checked By	Date Checked	SHEET NO. 18 D-9 OF 90 SHEETS

CAD USER: ksmith
PLOT DATE: Jan 31, 2012-03:16:19pm
FILE NAME: RCB_D-1-D-9
PATH: V:\Ridgecrest - FN-09105 - Ridgecrest Blvd\CADD\Drawing\

CONSTRUCTION NOTES

1. CONSTRUCT TYPE "A" 8" CURB AND GUTTER PER DETAIL 22 & 23 ON SHEET D-4.
2. CONSTRUCT 10' TRANSITION PER DETAIL 3 ON SHEET D-1.
3. CONSTRUCT MODIFIED CURB & GUTTER PER DETAIL 1 ON SHEET D-1.
4. CONSTRUCT TYPE 4 CURB PER DETAIL 9 ON SHEET D-1.
5. CONSTRUCT TYPE 3 CURB PER DETAIL 8 ON SHEET D-1.
6. CONSTRUCT TYPE 5 CURB PER DETAIL 10 ON SHEET D-1.
7. CONSTRUCT 10' CROSS - GUTTER & APRON DETAIL 26 & 27 ON SHEET D-4.
8. CONSTRUCT 12.5' MODIFIED CROSS - GUTTER & APRON PER DETAIL 12 ON SHEET D-2.
9. CONSTRUCT SIDEWALK PER DETAIL 24 & 25 ON SHEET D-4.
10. CONSTRUCT RESIDENTIAL OR COMMERCIAL DRIVEWAY PER DETAIL 13 ON SHEET D-2.
11. CONSTRUCT NEW SIDEWALK RAMP PER DETAIL 4 ON SHEET D-1.
12. RELOCATE EXISTING MAILBOX PER DETAIL 20 ON SHEET D-3.
13. REMOVE AND REPLACE FENCE PER DETAIL 16 ON SHEET D-3.
14. CONSTRUCT TREEWELL PER DETAIL ON LD SHEETS. SEE ALSO CD-SHEETS FOR TREE WELL GRADING.
15. CONSTRUCT AB DRIVEWAY. SEE CD SHEETS.
16. CONSTRUCT 20' MODIFIED CROSS-GUTTER PER DETAIL 14 ON SHEET D-2.
17. CONSTRUCT TYPE 6 CURB PER DETAIL 11 ON SHEET D-1.
18. INSTALL DECORATIVE BOLLARD PER DETAIL 2 ON SHEET D-1.
19. CONSTRUCT BULB OUT PER DETAIL 21 ON SHEET D-3.
20. CONSTRUCT DIAGONAL CURB RAMP PER DETAIL 28 ON SHEET D-5.
21. CONSTRUCT PERMANENT BARRICADE PER DETAIL 31 ON SHEET D-5.
22. (P) ELECTROLIER. SEE ELECTRICAL SHEETS FOR INFORMATION.
23. CONSTRUCT MODIFIED COMMERCIAL DRIVEWAY PER DETAIL 35 ON SHEET D-6.
23. REPLACE EXISTING GATE IN KIND.

GENERAL NOTES

1. STATION AND OFFSET CALLOUTS ARE TO THE TOP FACE OF CURB UNLESS NOTED OTHERWISE.
2. FOR UTILITY WORK, SEE U-SHEETS.
3. FOR ELECTRICAL WORK, SEE E-SHEETS.
4. FOR LANDSCAPE WORK, SEE PP/IP/LD SHEETS.
5. FOR CONTROL LINE & MONUMENT INFORMATION, SEE SHEET S-1.

LEGEND

DEMOLITION AREA

LIMITS OF AC PVMT GRIND

A / X-1 — CROSS SECTION / SHEET NAME

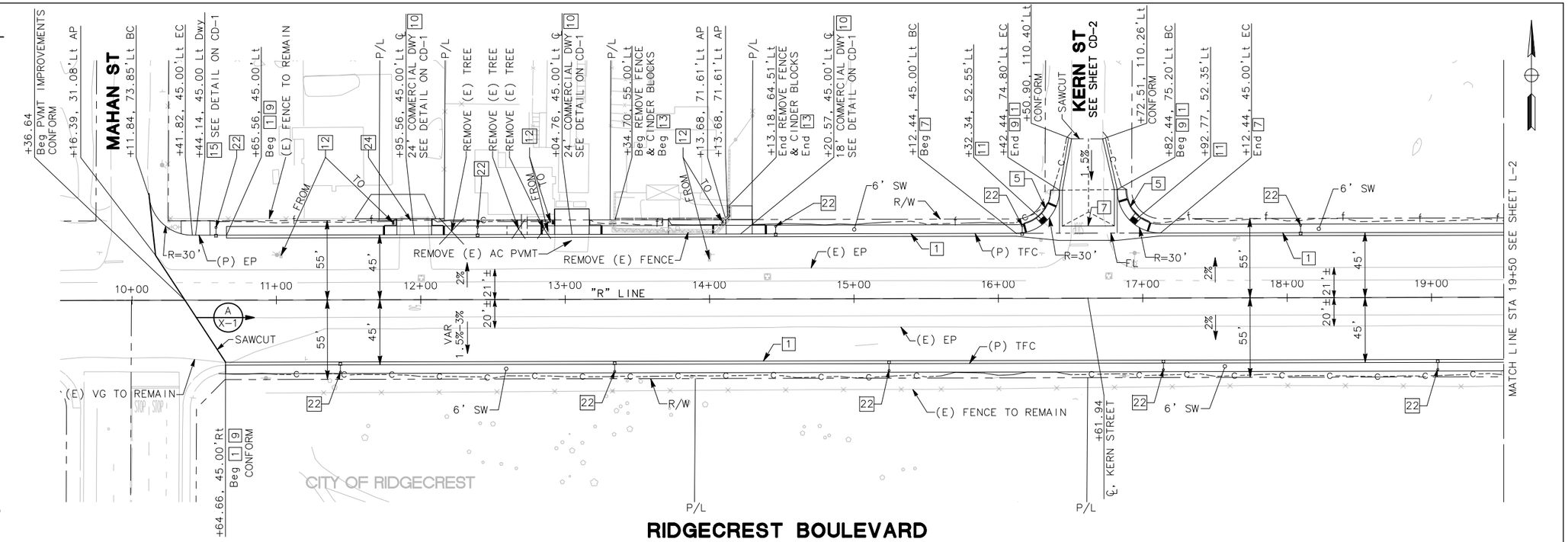

RIDGECREST BOULEVARD PLAN

SCALE: 1"= 40'

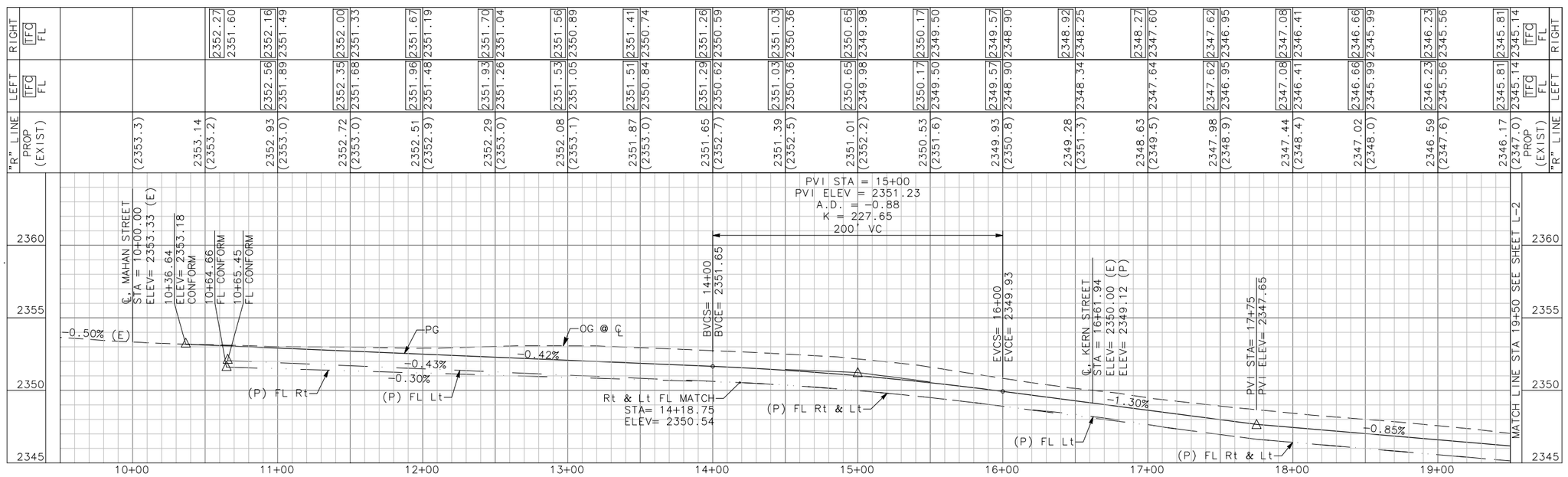

PROFILE

SCALE H: 1"= 40'
V: 1"= 4'

SHELF-READY PLANS - NOT FOR CONSTRUCTION

Project No.			
ST0101	CITY OF RIDGECREST W. RIDGECREST BOULEVARD RECONSTRUCTION PROJECT LAYOUT 9+50 TO 19+50	REGISTERED PROFESSIONAL ENGINEER EDGAR A. NORIEGA No. 61555 Exp. 6/30/13 CIVIL STATE OF CALIFORNIA	MARK THOMAS & COMPANY, INC. 7571 N REMINGTON AVENUE, SUITE 102 FRESNO, CALIFORNIA 93720 (559) 447-1938 FAX: (559) 447-8586 WWW.MARKTHOMAS.COM MTCO JOB NUMBER: FN-09105

DATE: 11/18/2011	Revisions	Checked By	Date Checked
SCALE:			
DRAWN BY: KS/MB/JL			
CK'D BY: CG			
DATE CK'D:			

SHEET NO. 19

L-1

OF 90 SHEETS

PATH: V:\Ridgecrest - FN-09105 - Ridgecrest Blvd\CADD\Drawing\ FILE NAME: RCB_L-1-L-8 PLOT DATE: Jan 31, 2012-03:16:26pm CAD USER: ksmith

CONSTRUCTION NOTES

1. CONSTRUCT TYPE "A" 8" CURB AND GUTTER PER DETAIL 22 & 23 ON SHEET D-4.
2. CONSTRUCT 10' TRANSITION PER DETAIL 3 ON SHEET D-1.
3. CONSTRUCT MODIFIED CURB & GUTTER PER DETAIL 1 ON SHEET D-1.
4. CONSTRUCT TYPE 4 CURB PER DETAIL 9 ON SHEET D-1.
5. CONSTRUCT TYPE 3 CURB PER DETAIL 8 ON SHEET D-1.
6. CONSTRUCT TYPE 5 CURB PER DETAIL 10 ON SHEET D-1.
7. CONSTRUCT 10' CROSS - GUTTER & APRON DETAIL 26 & 27 ON SHEET D-4.
8. CONSTRUCT 12.5' MODIFIED CROSS - GUTTER & APRON PER DETAIL 12 ON SHEET D-2.
9. CONSTRUCT SIDEWALK PER DETAIL 24 & 25 ON SHEET D-4.
10. CONSTRUCT RESIDENTIAL OR COMMERCIAL DRIVEWAY PER DETAIL 13 ON SHEET D-2.
11. CONSTRUCT NEW SIDEWALK RAMP PER DETAIL 4 ON SHEET D-1.
12. RELOCATE EXISTING MAILBOX PER DETAIL 20 ON SHEET D-3.
13. REMOVE AND REPLACE FENCE PER DETAIL 16 ON SHEET D-3.
14. CONSTRUCT TREEWELL PER DETAIL ON LD SHEETS. SEE ALSO CD-SHEETS FOR TREE WELL GRADING.
15. CONSTRUCT AB DRIVEWAY. SEE CD SHEETS.
16. CONSTRUCT 20' MODIFIED CROSS-GUTTER PER DETAIL 14 ON SHEET D-2.
17. CONSTRUCT TYPE 6 CURB PER DETAIL 11 ON SHEET D-1.
18. INSTALL DECORATIVE BOLLARD PER DETAIL 2 ON SHEET D-1.
19. CONSTRUCT BULB OUT PER DETAIL 21 ON SHEET D-3.
20. CONSTRUCT DIAGONAL CURB RAMP PER DETAIL 28 ON SHEET D-5.
21. CONSTRUCT PERMANENT BARRICADE PER DETAIL 31 ON SHEET D-5.
22. (P) ELECTROLIER. SEE ELECTRICAL SHEETS FOR INFORMATION.
23. CONSTRUCT MODIFIED COMMERCIAL DRIVEWAY PER DETAIL 35 ON SHEET D-6.
23. REPLACE EXISTING GATE IN KIND.

GENERAL NOTES

1. STATION AND OFFSET CALLOUTS ARE TO THE TOP FACE OF CURB UNLESS NOTED OTHERWISE.
2. FOR UTILITY WORK, SEE U-SHEETS.
3. FOR ELECTRICAL WORK, SEE E-SHEETS.
4. FOR LANDSCAPE WORK, SEE PP/IP/LD SHEETS.
5. FOR CONTROL LINE & MONUMENT INFORMATION, SEE SHEET S-1.

LEGEND

DEMOLITION AREA

LIMITS OF AC PVMT GRIND

A / X-1 — CROSS SECTION / SHEET NAME

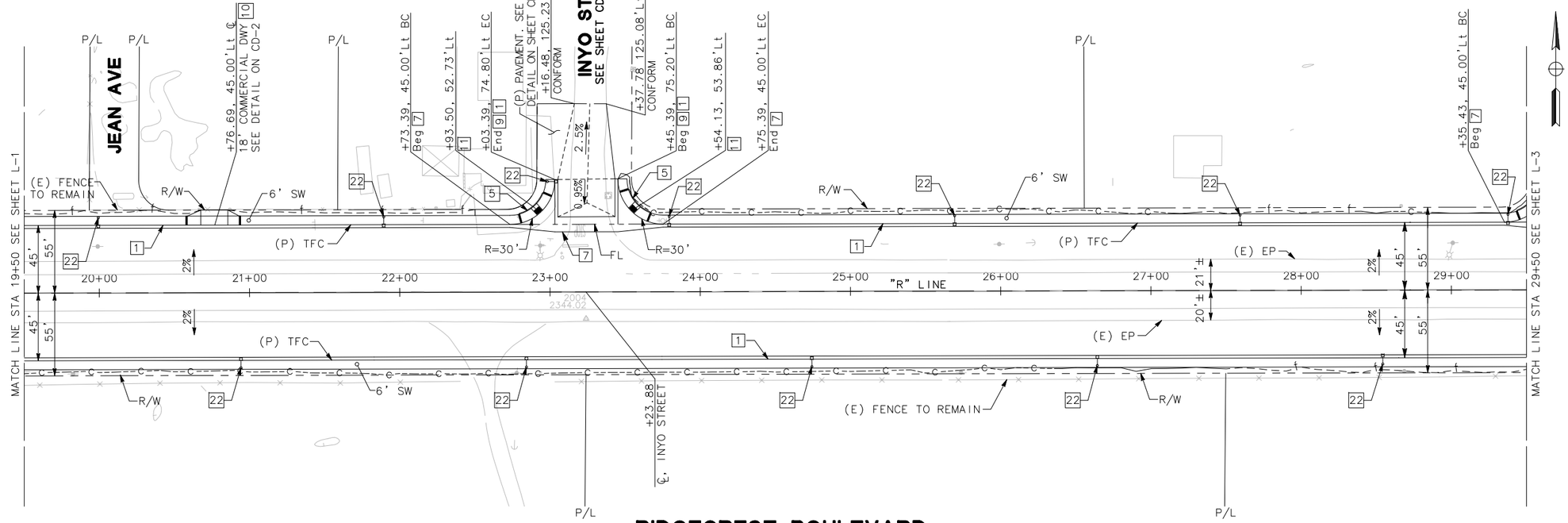

RIDGECREST BOULEVARD PLAN

SCALE: 1"= 40'

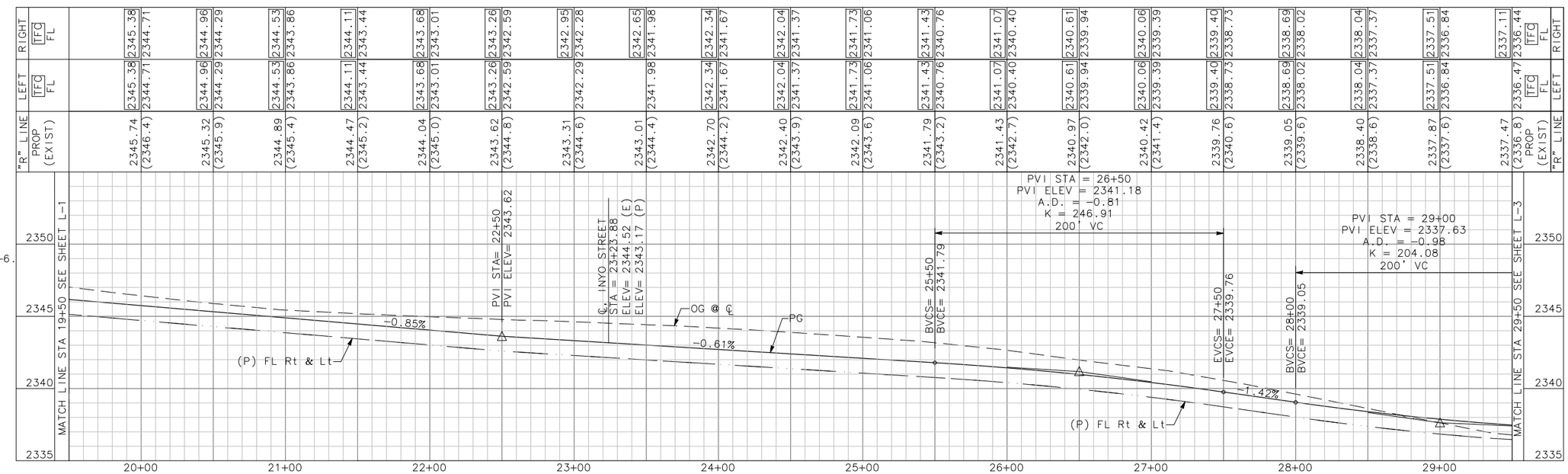

PROFILE

SCALE H: 1"= 40'
V: 1"= 4'

SHELF-READY PLANS - NOT FOR CONSTRUCTION

Project No.						
ST0101	CITY OF RIDGECREST W. RIDGECREST BOULEVARD RECONSTRUCTION PROJECT LAYOUT 19+50 TO 29+50	REGISTERED PROFESSIONAL ENGINEER EDGAR A. NORIEGA No. 61555 Exp. 6/30/13 CIVIL STATE OF CALIFORNIA	MARK THOMAS & COMPANY, INC. 7571 N REMINGTON AVENUE, SUITE 102 FRESNO, CALIFORNIA 93720 (559) 447-1938 FAX: (559) 447-8586 WWW.MARKTHOMAS.COM MTCO JOB NUMBER: FN-09105	DATE: 11/18/2011 SCALE: DRAWN BY: KS/MB/JL CK'D BY: CG DATE CK'D:	Revisions / Checked By / Date Checked	SHEET NO. 20 L-2 OF 90 SHEETS

PATH: V:\Ridgecrest - FN-09105 - Ridgecrest Blvd\CADD\Drawing\ FILE NAME: RCB_L-1-L-8 PLOT DATE: Jan 31, 2012-03:16:30pm CAD USER: ksmith

CONSTRUCTION NOTES

1. CONSTRUCT TYPE "A" 8" CURB AND GUTTER PER DETAIL 22 & 23 ON SHEET D-4.
2. CONSTRUCT 10' TRANSITION PER DETAIL 3 ON SHEET D-1.
3. CONSTRUCT MODIFIED CURB & GUTTER PER DETAIL 1 ON SHEET D-1.
4. CONSTRUCT TYPE 4 CURB PER DETAIL 9 ON SHEET D-1.
5. CONSTRUCT TYPE 3 CURB PER DETAIL 8 ON SHEET D-1.
6. CONSTRUCT TYPE 5 CURB PER DETAIL 10 ON SHEET D-1.
7. CONSTRUCT 10' CROSS - GUTTER & APRON DETAIL 26 & 27 ON SHEET D-4.
8. CONSTRUCT 12.5' MODIFIED CROSS - GUTTER & APRON PER DETAIL 12 ON SHEET D-2.
9. CONSTRUCT SIDEWALK PER DETAIL 24 & 25 ON SHEET D-4.
10. CONSTRUCT RESIDENTIAL OR COMMERCIAL DRIVEWAY PER DETAIL 13 ON SHEET D-2.
11. CONSTRUCT NEW SIDEWALK RAMP PER DETAIL 4 ON SHEET D-1.
12. RELOCATE EXISTING MAILBOX PER DETAIL 20 ON SHEET D-3.
13. REMOVE AND REPLACE FENCE PER DETAIL 16 ON SHEET D-3.
14. CONSTRUCT TREEWELL PER DETAIL ON LD SHEETS. SEE ALSO CD-SHEETS FOR TREE WELL GRADING.
15. CONSTRUCT AB DRIVEWAY. SEE CD SHEETS.
16. CONSTRUCT 20' MODIFIED CROSS-GUTTER PER DETAIL 14 ON SHEET D-2.
17. CONSTRUCT TYPE 6 CURB PER DETAIL 11 ON SHEET D-1.
18. INSTALL DECORATIVE BOLLARD PER DETAIL 2 ON SHEET D-1.
19. CONSTRUCT BULB OUT PER DETAIL 21 ON SHEET D-3.
20. CONSTRUCT DIAGONAL CURB RAMP PER DETAIL 28 ON SHEET D-5.
21. CONSTRUCT PERMANENT BARRICADE PER DETAIL 31 ON SHEET D-5.
22. (P) ELECTROLIER. SEE ELECTRICAL SHEETS FOR INFORMATION.
23. CONSTRUCT MODIFIED COMMERCIAL DRIVEWAY PER DETAIL 35 ON SHEET D-6.
23. REPLACE EXISTING GATE IN KIND.

GENERAL NOTES

1. STATION AND OFFSET CALLOUTS ARE TO THE TOP FACE OF CURB UNLESS NOTED OTHERWISE.
2. FOR UTILITY WORK, SEE U-SHEETS.
3. FOR ELECTRICAL WORK, SEE E-SHEETS.
4. FOR LANDSCAPE WORK, SEE PP/IP/LD SHEETS.
5. FOR CONTROL LINE & MONUMENT INFORMATION, SEE SHEET S-1.

LEGEND

DEMOLITION AREA

LIMITS OF AC PVMT GRIND

CROSS SECTION (A / X-1) — SHEET NAME

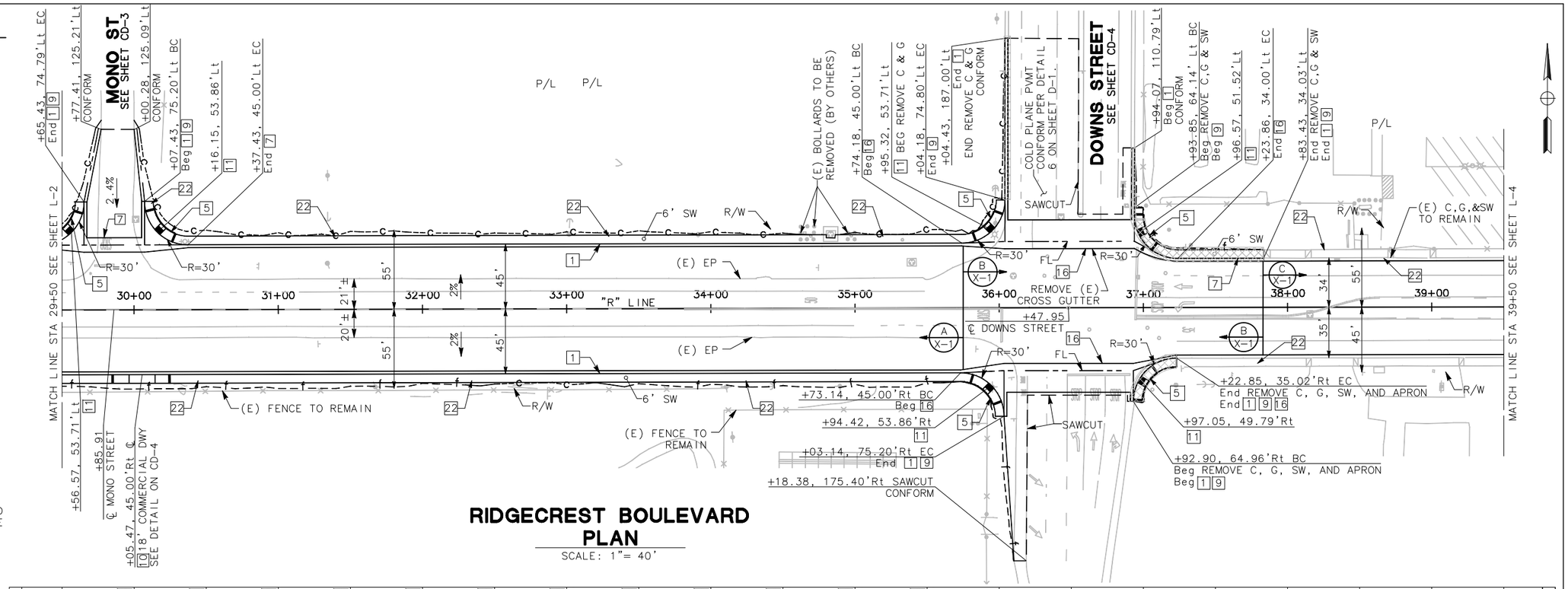

RIDGECREST BOULEVARD PLAN

SCALE: 1"= 40'

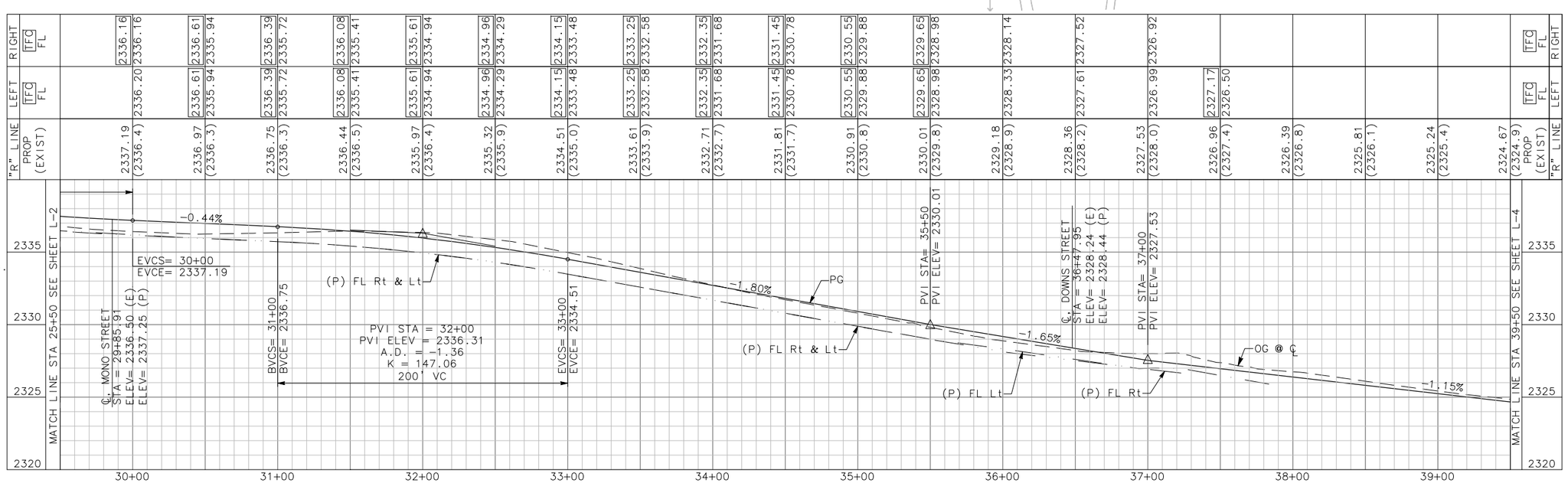

PROFILE

SCALE H: 1"= 40'
V: 1"= 4'

SHELF-READY PLANS - NOT FOR CONSTRUCTION

Project No.			
ST0101	CITY OF RIDGECREST W. RIDGECREST BOULEVARD RECONSTRUCTION PROJECT LAYOUT 29+50 TO 39+50	RECORDED PROFESSIONAL ENGINEER EDGAR A. NORIEGA No. 61555 Exp. 6/30/13 CIVIL STATE OF CALIFORNIA	MARK THOMAS & COMPANY, INC. 7571 N REMINGTON AVENUE, SUITE 102 FRESNO, CALIFORNIA 93720 (559) 447-1938 FAX: (559) 447-8586 WWW.MARKTHOMAS.COM MTCO JOB NUMBER: FN-09105

DATE: 11/18/2011	Revisions	Checked By	Date Checked	SHEET NO. 21
SCALE:				L-3
DRAWN BY: KS/MB/JL				
CK'D BY: GC				OF 90 SHEETS
DATE CK'D:				

PATH: V:\Ridgecrest - FN-09105 - Ridgecrest Blvd\CADD\Drawing\ FILE NAME: RCB_L-1-L-8 PLOT DATE: Jan 31, 2012-03:16:35pm CAD USER: ksmith

CONSTRUCTION NOTES

1. CONSTRUCT TYPE "A" 8" CURB AND GUTTER PER DETAIL 22 & 23 ON SHEET D-4.
2. CONSTRUCT 10' TRANSITION PER DETAIL 3 ON SHEET D-1.
3. CONSTRUCT MODIFIED CURB & GUTTER PER DETAIL 1 ON SHEET D-1.
4. CONSTRUCT TYPE 4 CURB PER DETAIL 9 ON SHEET D-1.
5. CONSTRUCT TYPE 3 CURB PER DETAIL 8 ON SHEET D-1.
6. CONSTRUCT TYPE 5 CURB PER DETAIL 10 ON SHEET D-1.
7. CONSTRUCT 10' CROSS - GUTTER & APRON DETAIL 26 & 27 ON SHEET D-4.
8. CONSTRUCT 12.5' MODIFIED CROSS - GUTTER & APRON PER DETAIL 12 ON SHEET D-2.
9. CONSTRUCT SIDEWALK PER DETAIL 24 & 25 ON SHEET D-4.
10. CONSTRUCT RESIDENTIAL OR COMMERCIAL DRIVEWAY PER DETAIL 13 ON SHEET D-2.
11. CONSTRUCT NEW SIDEWALK RAMP PER DETAIL 4 ON SHEET D-1.
12. RELOCATE EXISTING MAILBOX PER DETAIL 20 ON SHEET D-3.
13. REMOVE AND REPLACE FENCE PER DETAIL 16 ON SHEET D-3.
14. CONSTRUCT TREEWELL PER DETAIL ON LD SHEETS. SEE ALSO CD-SHEETS FOR TREE WELL GRADING.
15. CONSTRUCT AB DRIVEWAY. SEE CD SHEETS.
16. CONSTRUCT 20' MODIFIED CROSS-GUTTER PER DETAIL 14 ON SHEET D-2.
17. CONSTRUCT TYPE 6 CURB PER DETAIL 11 ON SHEET D-1.
18. INSTALL DECORATIVE BOLLARD PER DETAIL 2 ON SHEET D-1.
19. CONSTRUCT BULB OUT PER DETAIL 21 ON SHEET D-3.
20. CONSTRUCT DIAGONAL CURB RAMP PER DETAIL 28 ON SHEET D-5.
21. CONSTRUCT PERMANENT BARRICADE PER DETAIL 31 ON SHEET D-5.
22. (P) ELECTROLIER. SEE ELECTRICAL SHEETS FOR INFORMATION.
23. CONSTRUCT MODIFIED COMMERCIAL DRIVEWAY PER DETAIL 35 ON SHEET D-6.
23. REPLACE EXISTING GATE IN KIND.

GENERAL NOTES

1. STATION AND OFFSET CALLOUTS ARE TO THE TOP FACE OF CURB UNLESS NOTED OTHERWISE.
2. FOR UTILITY WORK, SEE U-SHEETS.
3. FOR ELECTRICAL WORK, SEE E-SHEETS.
4. FOR LANDSCAPE WORK, SEE PP/IP/LD SHEETS.
5. FOR CONTROL LINE & MONUMENT INFORMATION, SEE SHEET S-1.

LEGEND

DEMOLITION AREA

LIMITS OF AC PVMT GRIND

CROSS SECTION (A / X-1) — SHEET NAME

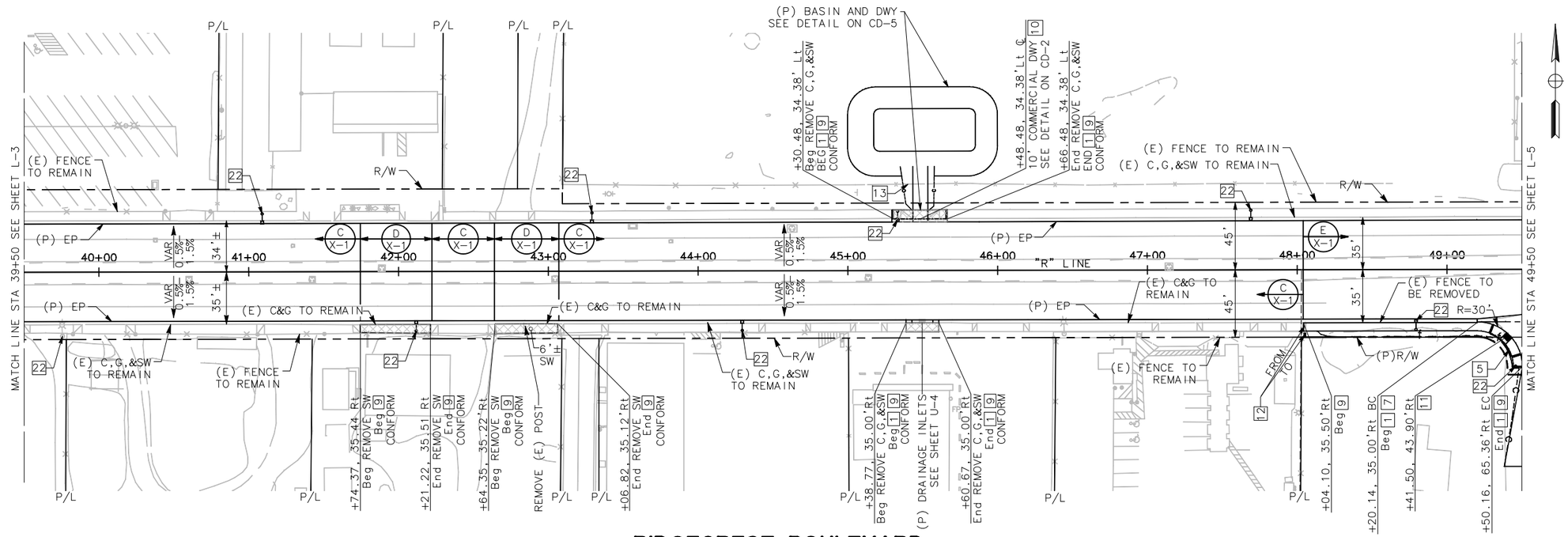

RIDGECREST BOULEVARD PLAN

SCALE: 1"= 40'

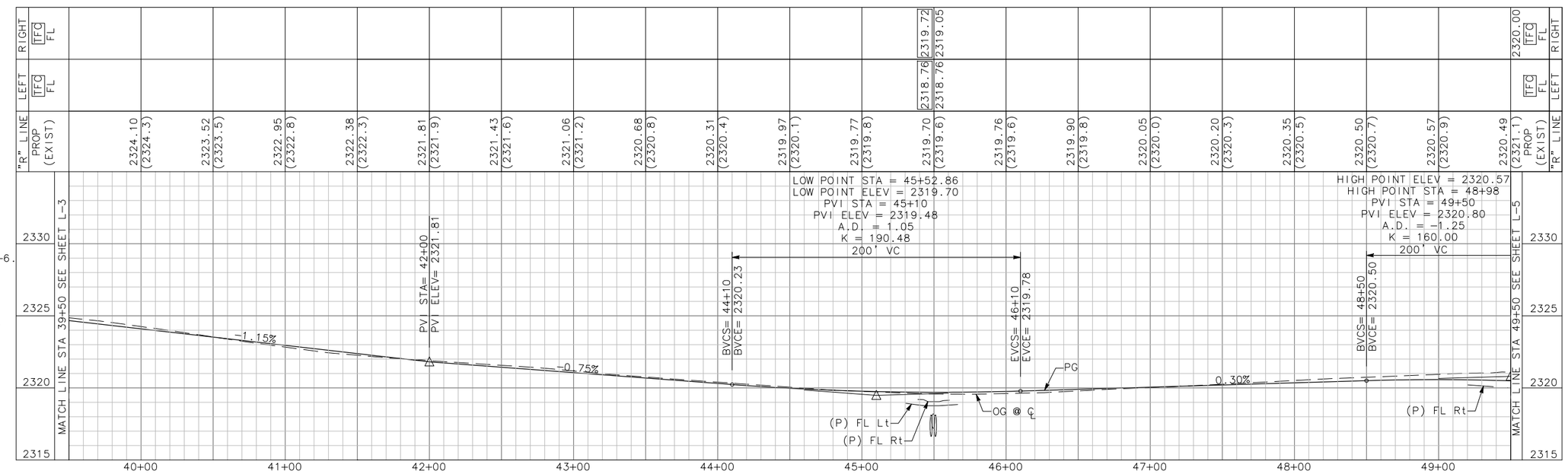

PROFILE

SCALE H: 1"= 40'
V: 1"= 4'

SHELF-READY PLANS - NOT FOR CONSTRUCTION

Project No.						
ST0101	CITY OF RIDGECREST W. RIDGECREST BOULEVARD RECONSTRUCTION PROJECT LAYOUT 39+50 TO 49+50	REGISTERED PROFESSIONAL ENGINEER EDGAR A. NORIEGA No. 61555 Exp. 6/30/13 CIVIL STATE OF CALIFORNIA	MARK THOMAS & COMPANY, INC. 7571 N REMINGTON AVENUE, SUITE 102 FRESNO, CALIFORNIA 93720 (559) 447-1938 FAX: (559) 447-8586 WWW.MARKTHOMAS.COM MTCO JOB NUMBER: FN-09105	DATE: 11/18/2011 SCALE: DRAWN BY: KS/MB/JL CK'D BY: CG DATE CK'D:	Revisions / Checked By / Date Checked	SHEET NO. 22 L-4 OF 90 SHEETS

PATH: V:\Ridgecrest - FN-09105 - Ridgecrest Blvd\CADD\Drawing\ FILE NAME: RCB_L-1-L-8 PLOT DATE: Jan 31, 2012-03:16:39pm CAD USER: ksmith

CONSTRUCTION NOTES

1. CONSTRUCT TYPE "A" 8" CURB AND GUTTER PER DETAIL 22 & 23 ON SHEET D-4.
2. CONSTRUCT 10' TRANSITION PER DETAIL 3 ON SHEET D-1.
3. CONSTRUCT MODIFIED CURB & GUTTER PER DETAIL 1 ON SHEET D-1.
4. CONSTRUCT TYPE 4 CURB PER DETAIL 9 ON SHEET D-1.
5. CONSTRUCT TYPE 3 CURB PER DETAIL 8 ON SHEET D-1.
6. CONSTRUCT TYPE 5 CURB PER DETAIL 10 ON SHEET D-1.
7. CONSTRUCT 10' CROSS - GUTTER & APRON DETAIL 26 & 27 ON SHEET D-4.
8. CONSTRUCT 12.5' MODIFIED CROSS - GUTTER & APRON PER DETAIL 12 ON SHEET D-2.
9. CONSTRUCT SIDEWALK PER DETAIL 24 & 25 ON SHEET D-4.
10. CONSTRUCT RESIDENTIAL OR COMMERCIAL DRIVEWAY PER DETAIL 13 ON SHEET D-2.
11. CONSTRUCT NEW SIDEWALK RAMP PER DETAIL 4 ON SHEET D-1.
12. RELOCATE EXISTING MAILBOX PER DETAIL 20 ON SHEET D-3.
13. REMOVE AND REPLACE FENCE PER DETAIL 16 ON SHEET D-3.
14. CONSTRUCT TREEWELL PER DETAIL ON LD SHEETS. SEE ALSO CD-SHEETS FOR TREE WELL GRADING.
15. CONSTRUCT AB DRIVEWAY. SEE CD SHEETS.
16. CONSTRUCT 20' MODIFIED CROSS-GUTTER PER DETAIL 14 ON SHEET D-2.
17. CONSTRUCT TYPE 6 CURB PER DETAIL 11 ON SHEET D-1.
18. INSTALL DECORATIVE BOLLARD PER DETAIL 2 ON SHEET D-1.
19. CONSTRUCT BULB OUT PER DETAIL 21 ON SHEET D-3.
20. CONSTRUCT DIAGONAL CURB RAMP PER DETAIL 28 ON SHEET D-5.
21. CONSTRUCT PERMANENT BARRICADE PER DETAIL 31 ON SHEET D-5.
22. (P) ELECTROLIER. SEE ELECTRICAL SHEETS FOR INFORMATION.
23. CONSTRUCT MODIFIED COMMERCIAL DRIVEWAY PER DETAIL 35 ON SHEET D-6.
23. REPLACE EXISTING GATE IN KIND.

GENERAL NOTES

1. STATION AND OFFSET CALLOUTS ARE TO THE TOP FACE OF CURB UNLESS NOTED OTHERWISE.
2. FOR UTILITY WORK, SEE U-SHEETS.
3. FOR ELECTRICAL WORK, SEE E-SHEETS.
4. FOR LANDSCAPE WORK, SEE PP/IP/LD SHEETS.
5. FOR CONTROL LINE & MONUMENT INFORMATION, SEE SHEET S-1.

LEGEND

DEMOLITION AREA

LIMITS OF AC PVMT GRIND

A / X-1 — CROSS SECTION / SHEET NAME

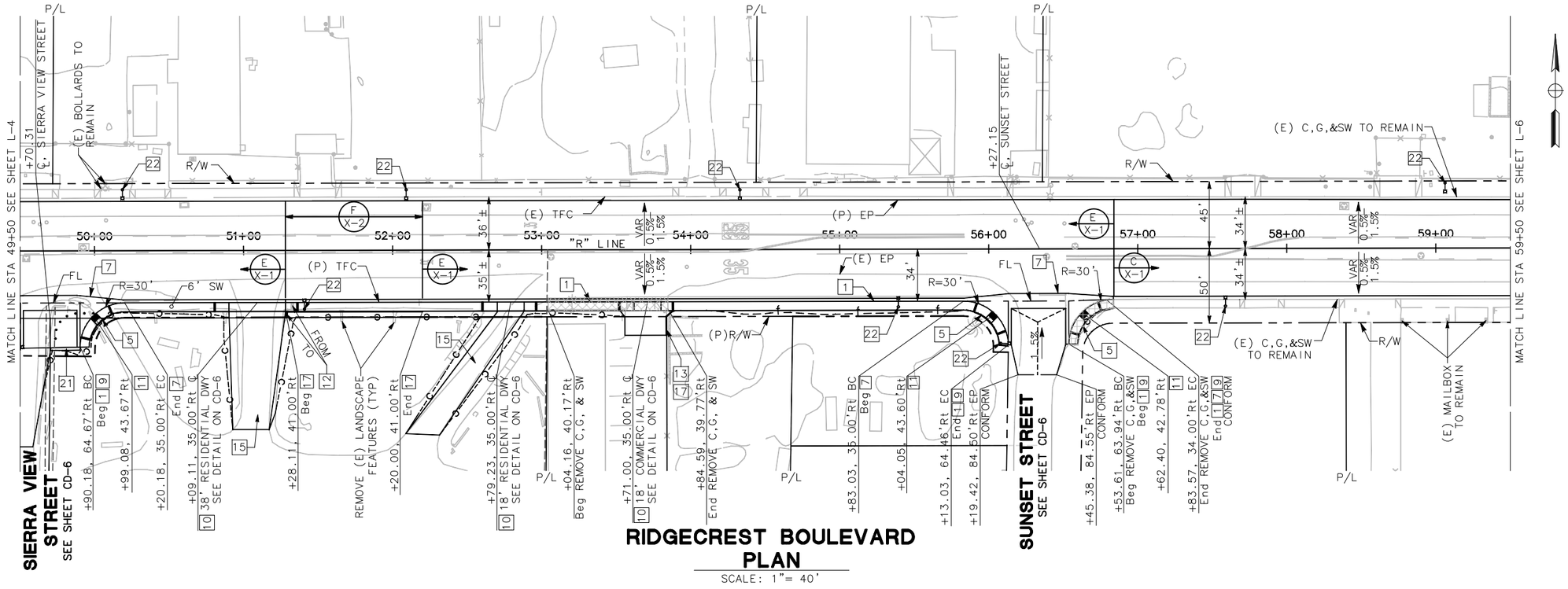

RIDGECREST BOULEVARD PLAN

SCALE: 1"= 40'

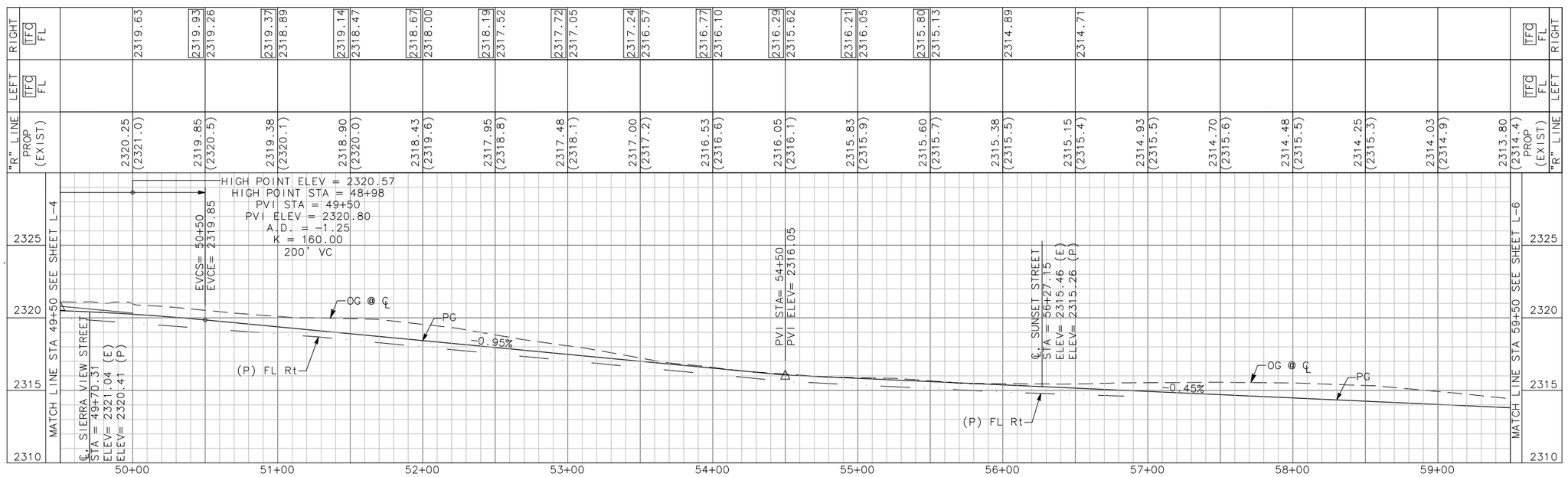

PROFILE

SCALE H: 1"= 40'
V: 1"= 4'

SHELF-READY PLANS - NOT FOR CONSTRUCTION

Project No.	
ST0101	CITY OF RIDGECREST W. RIDGECREST BOULEVARD RECONSTRUCTION PROJECT LAYOUT 49+50 TO 59+50

REGISTERED PROFESSIONAL ENGINEER — EDGAR A. NORIEGA, No. 61555, Exp. 6/30/13, CIVIL, STATE OF CALIFORNIA

MARK THOMAS & COMPANY, INC.
7571 N REMINGTON AVENUE, SUITE 102
FRESNO, CALIFORNIA 93720
(559) 447-1938 FAX: (559) 447-8586
WWW.MARKTHOMAS.COM
MTCO JOB NUMBER: FN-09105

DATE: 11/18/2011
SCALE:
DRAWN BY: KS/MB/JL
CK'D BY: CG
DATE CK'D:

Revisions	Checked By	Date Checked

SHEET NO. 23

L-5

OF 90 SHEETS

PATH: V:\Ridgecrest - FN-09105 - Ridgecrest Blvd\CADD\Drawing\
FILE NAME: RCB_L-1-L-8
PLOT DATE: Jan 31, 2012-03:16:43pm
CAD USER: ksmith

CONSTRUCTION NOTES

1. CONSTRUCT TYPE "A" 8" CURB AND GUTTER PER DETAIL 22 & 23 ON SHEET D-4.
2. CONSTRUCT 10' TRANSITION PER DETAIL 3 ON SHEET D-1.
3. CONSTRUCT MODIFIED CURB & GUTTER PER DETAIL 1 ON SHEET D-1.
4. CONSTRUCT TYPE 4 CURB PER DETAIL 9 ON SHEET D-1.
5. CONSTRUCT TYPE 3 CURB PER DETAIL 8 ON SHEET D-1.
6. CONSTRUCT TYPE 5 CURB PER DETAIL 10 ON SHEET D-1.
7. CONSTRUCT 10' CROSS - GUTTER & APRON DETAIL 26 & 27 ON SHEET D-4.
8. CONSTRUCT 12.5' MODIFIED CROSS - GUTTER & APRON PER DETAIL 12 ON SHEET D-2.
9. CONSTRUCT SIDEWALK PER DETAIL 24 & 25 ON SHEET D-4.
10. CONSTRUCT RESIDENTIAL OR COMMERCIAL DRIVEWAY PER DETAIL 13 ON SHEET D-2.
11. CONSTRUCT NEW SIDEWALK RAMP PER DETAIL 4 ON SHEET D-1.
12. RELOCATE EXISTING MAILBOX PER DETAIL 20 ON SHEET D-3.
13. REMOVE AND REPLACE FENCE PER DETAIL 16 ON SHEET D-3.
14. CONSTRUCT TREEWELL PER DETAIL ON LD SHEETS. SEE ALSO CD-SHEETS FOR TREE WELL GRADING.
15. CONSTRUCT AB DRIVEWAY. SEE CD SHEETS.
16. CONSTRUCT 20' MODIFIED CROSS-GUTTER PER DETAIL 14 ON SHEET D-2.
17. CONSTRUCT TYPE 6 CURB PER DETAIL 11 ON SHEET D-1.
18. INSTALL DECORATIVE BOLLARD PER DETAIL 2 ON SHEET D-1.
19. CONSTRUCT BULB OUT PER DETAIL 21 ON SHEET D-3.
20. CONSTRUCT DIAGONAL CURB RAMP PER DETAIL 28 ON SHEET D-5.
21. CONSTRUCT PERMANENT BARRICADE PER DETAIL 31 ON SHEET D-5.
22. (P) ELECTROLIER. SEE ELECTRICAL SHEETS FOR INFORMATION.
23. CONSTRUCT MODIFIED COMMERCIAL DRIVEWAY PER DETAIL 35 ON SHEET D-6.
23. REPLACE EXISTING GATE IN KIND.

GENERAL NOTES

1. STATION AND OFFSET CALLOUTS ARE TO THE TOP FACE OF CURB UNLESS NOTED OTHERWISE.
2. FOR UTILITY WORK, SEE U-SHEETS.
3. FOR ELECTRICAL WORK, SEE E-SHEETS.
4. FOR LANDSCAPE WORK, SEE PP/IP/LD SHEETS.
5. FOR CONTROL LINE & MONUMENT INFORMATION, SEE SHEET S-1.

LEGEND

DEMOLITION AREA

LIMITS OF AC PVMT GRIND

A / X-1 — CROSS SECTION / SHEET NAME

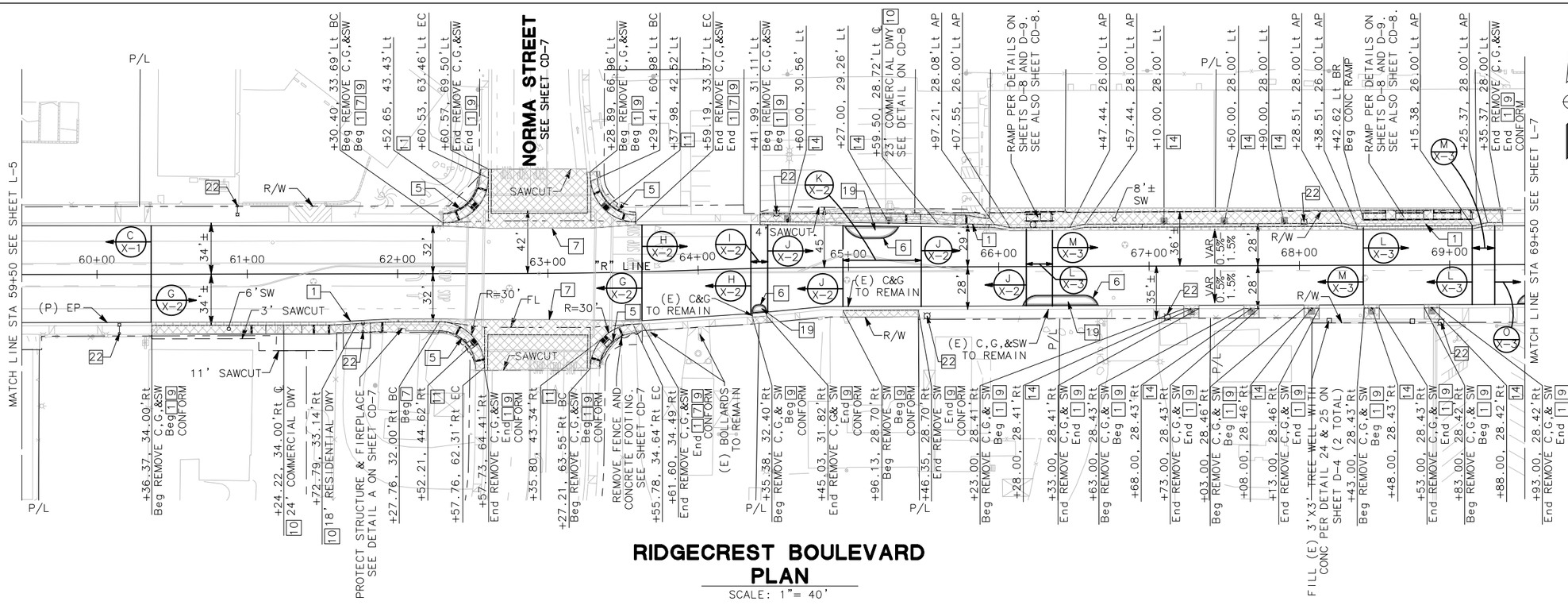

RIDGECREST BOULEVARD PLAN

SCALE: 1"= 40'

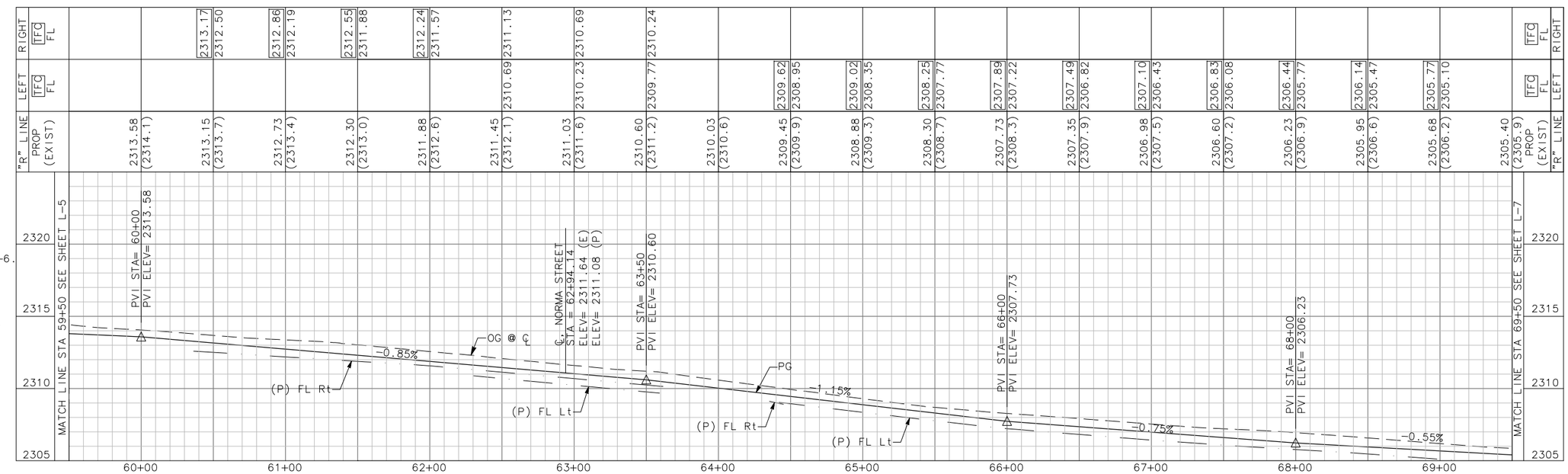

PROFILE

SCALE H: 1"= 40'
V: 1"= 4'

SHELF-READY PLANS - NOT FOR CONSTRUCTION

Project No.						
ST0101	CITY OF RIDGECREST W. RIDGECREST BOULEVARD RECONSTRUCTION PROJECT LAYOUT 59+50 TO 69+50	REGISTERED PROFESSIONAL ENGINEER EDGAR A. NORIEGA No. 61555 Exp. 6/30/13 CIVIL STATE OF CALIFORNIA	MARK THOMAS & COMPANY, INC. 7571 N REMINGTON AVENUE, SUITE 102 FRESNO, CALIFORNIA 93720 (559) 447-1938 FAX: (559) 447-8586 WWW.MARKTHOMAS.COM MTCO JOB NUMBER: FN-09105	DATE: 11/18/2011 SCALE: DRAWN BY: KS/MB/JL CK'D BY: CG DATE CK'D:	Revisions / Checked By / Date Checked	SHEET NO. 24 L-6 OF 90 SHEETS

FILE NAME: RCB_L-1-L-8
PLOT DATE: Jan 31, 2012-03:16:46pm
CAD USER: ksmith
PATH: V:\Ridgecrest - FN-09105 - Ridgecrest Blvd\CADD\Drawing\

CONSTRUCTION NOTES

1. CONSTRUCT TYPE "A" 8" CURB AND GUTTER PER DETAIL 22 & 23 ON SHEET D-4.
2. CONSTRUCT 10' TRANSITION PER DETAIL 3 ON SHEET D-1.
3. CONSTRUCT MODIFIED CURB & GUTTER PER DETAIL 1 ON SHEET D-1.
4. CONSTRUCT TYPE 4 CURB PER DETAIL 9 ON SHEET D-1.
5. CONSTRUCT TYPE 3 CURB PER DETAIL 8 ON SHEET D-1.
6. CONSTRUCT TYPE 5 CURB PER DETAIL 10 ON SHEET D-1.
7. CONSTRUCT 10' CROSS - GUTTER & APRON DETAIL 26 & 27 ON SHEET D-4.
8. CONSTRUCT 12.5' MODIFIED CROSS - GUTTER & APRON PER DETAIL 12 ON SHEET D-2.
9. CONSTRUCT SIDEWALK PER DETAIL 24 & 25 ON SHEET D-4.
10. CONSTRUCT RESIDENTIAL OR COMMERCIAL DRIVEWAY PER DETAIL 13 ON SHEET D-2.
11. CONSTRUCT NEW SIDEWALK RAMP PER DETAIL 4 ON SHEET D-1.
12. RELOCATE EXISTING MAILBOX PER DETAIL 20 ON SHEET D-3.
13. REMOVE AND REPLACE FENCE PER DETAIL 16 ON SHEET D-3.
14. CONSTRUCT TREEWELL PER DETAIL ON LD SHEETS. SEE ALSO CD-SHEETS FOR TREE WELL GRADING.
15. CONSTRUCT AB DRIVEWAY. SEE CD SHEETS.
16. CONSTRUCT 20' MODIFIED CROSS-GUTTER PER DETAIL 14 ON SHEET D-2.
17. CONSTRUCT TYPE 6 CURB PER DETAIL 11 ON SHEET D-1.
18. INSTALL DECORATIVE BOLLARD PER DETAIL 2 ON SHEET D-1.
19. CONSTRUCT BULB OUT PER DETAIL 21 ON SHEET D-3.
20. CONSTRUCT DIAGONAL CURB RAMP PER DETAIL 28 ON SHEET D-5.
21. CONSTRUCT PERMANENT BARRICADE PER DETAIL 31 ON SHEET D-5.
22. (P) ELECTROLIER. SEE ELECTRICAL SHEETS FOR INFORMATION.
23. CONSTRUCT MODIFIED COMMERCIAL DRIVEWAY PER DETAIL 35 ON SHEET D-6.
23. REPLACE EXISTING GATE IN KIND.

GENERAL NOTES

1. STATION AND OFFSET CALLOUTS ARE TO THE TOP FACE OF CURB UNLESS NOTED OTHERWISE.
2. FOR UTILITY WORK, SEE U-SHEETS.
3. FOR ELECTRICAL WORK, SEE E-SHEETS.
4. FOR LANDSCAPE WORK, SEE PP/IP/LD SHEETS.
5. FOR CONTROL LINE & MONUMENT INFORMATION, SEE SHEET S-1.

LEGEND

DEMOLITION AREA

LIMITS OF AC PVMT GRIND

A / X-1 — CROSS SECTION / SHEET NAME

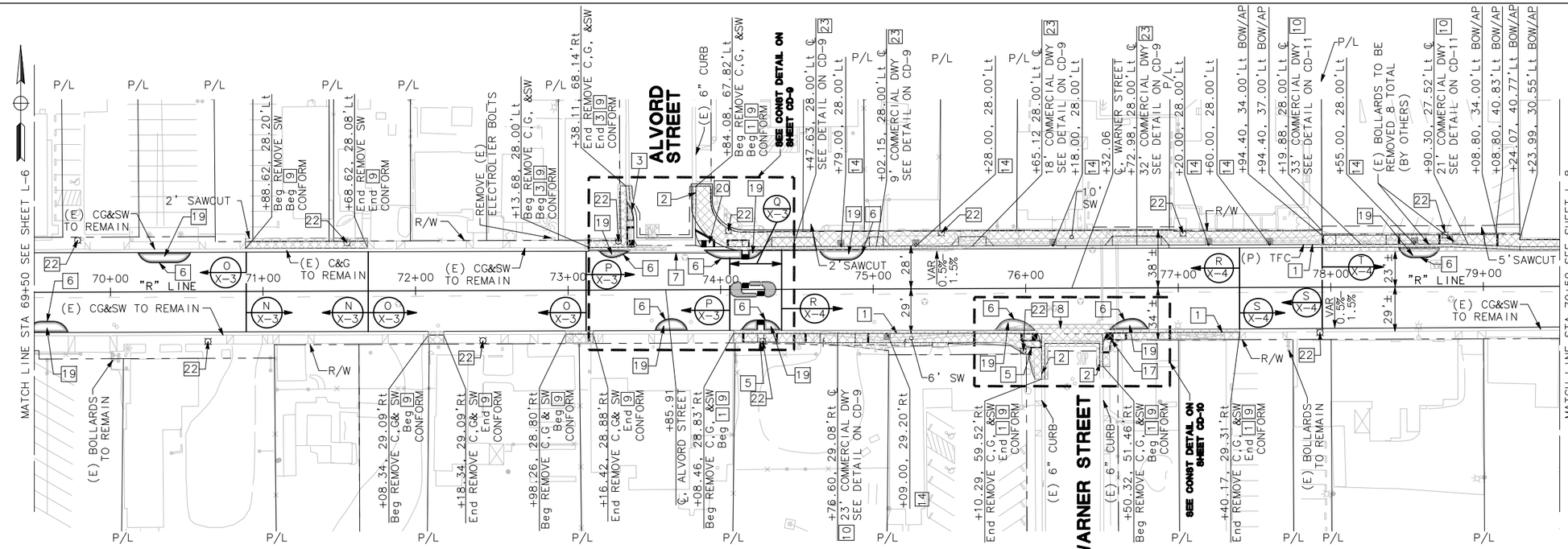

RIDGECREST BOULEVARD PLAN

SCALE: 1"= 40'

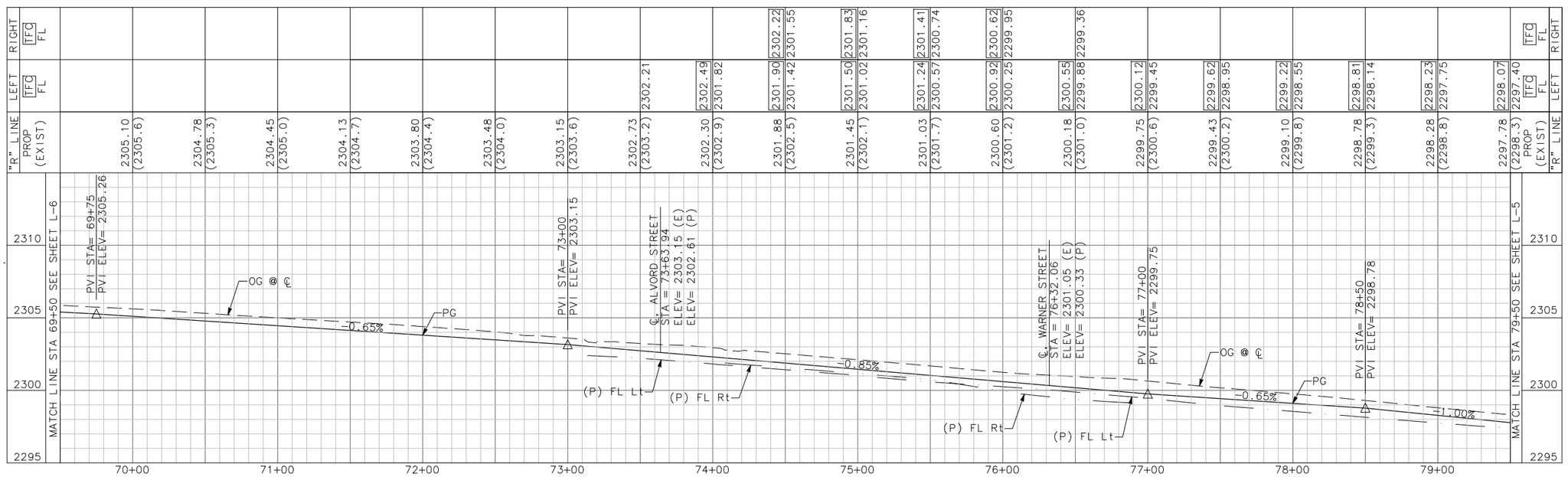

PROFILE

SCALE H: 1"= 40'
V: 1"= 4'

SHELF-READY PLANS - NOT FOR CONSTRUCTION

Project No.						
ST0101	CITY OF RIDGECREST W. RIDGECREST BOULEVARD RECONSTRUCTION PROJECT LAYOUT 69+50 TO 79+50	REGISTERED PROFESSIONAL ENGINEER EDGAR A. NORIEGA No. 61555 Exp. 6/30/13 CIVIL STATE OF CALIFORNIA	MARK THOMAS & COMPANY, INC. 7571 N REMINGTON AVENUE, SUITE 102 FRESNO, CALIFORNIA 93720 (559) 447-1938 FAX: (559) 447-8586 WWW.MARKTHOMAS.COM MTCO JOB NUMBER: FN-09105	DATE: 11/18/2011 SCALE: DRAWN BY: KS/MB/JL CK'D BY: CG DATE CK'D:	Revisions / Checked By / Date Checked	SHEET NO. 25 L-7 OF 90 SHEETS

PATH: V:\Ridgecrest - FN-09105 - Ridgecrest Blvd\CADD\Drawing\ FILE NAME: RCB_L-1-L-8 PLOT DATE: Jan 31, 2012-03:16:50pm CAD USER: ksmith

CONSTRUCTION NOTES

1. CONSTRUCT TYPE "A" 8" CURB AND GUTTER PER DETAIL 22 & 23 ON SHEET D-4.
2. CONSTRUCT 10' TRANSITION PER DETAIL 3 ON SHEET D-1.
3. CONSTRUCT MODIFIED CURB & GUTTER PER DETAIL 1 ON SHEET D-1.
4. CONSTRUCT TYPE 4 CURB PER DETAIL 9 ON SHEET D-1.
5. CONSTRUCT TYPE 3 CURB PER DETAIL 8 ON SHEET D-1.
6. CONSTRUCT TYPE 5 CURB PER DETAIL 10 ON SHEET D-1.
7. CONSTRUCT 10' CROSS - GUTTER & APRON DETAIL 26 & 27 ON SHEET D-4.
8. CONSTRUCT 12.5' MODIFIED CROSS - GUTTER & APRON PER DETAIL 12 ON SHEET D-2.
9. CONSTRUCT SIDEWALK PER DETAIL 24 & 25 ON SHEET D-4.
10. CONSTRUCT RESIDENTIAL OR COMMERCIAL DRIVEWAY PER DETAIL 13 ON SHEET D-2.
11. CONSTRUCT NEW SIDEWALK RAMP PER DETAIL 4 ON SHEET D-1.
12. RELOCATE EXISTING MAILBOX PER DETAIL 20 ON SHEET D-3.
13. REMOVE AND REPLACE FENCE PER DETAIL 16 ON SHEET D-3.
14. CONSTRUCT TREEWELL PER DETAIL ON LD SHEETS. SEE ALSO CD-SHEETS FOR TREE WELL GRADING.
15. CONSTRUCT AB DRIVEWAY. SEE CD SHEETS.
16. CONSTRUCT 20' MODIFIED CROSS-GUTTER PER DETAIL 14 ON SHEET D-2.
17. CONSTRUCT TYPE 6 CURB PER DETAIL 11 ON SHEET D-1.
18. INSTALL DECORATIVE BOLLARD PER DETAIL 2 ON SHEET D-1.
19. CONSTRUCT BULB OUT PER DETAIL 21 ON SHEET D-3.
20. CONSTRUCT DIAGONAL CURB RAMP PER DETAIL 28 ON SHEET D-5.
21. CONSTRUCT PERMANENT BARRICADE PER DETAIL 31 ON SHEET D-5.
22. (P) ELECTROLIER. SEE ELECTRICAL SHEETS FOR INFORMATION.
23. CONSTRUCT MODIFIED COMMERCIAL DRIVEWAY PER DETAIL 35 ON SHEET D-6.
23. REPLACE EXISTING GATE IN KIND.

GENERAL NOTES

1. STATION AND OFFSET CALLOUTS ARE TO THE TOP FACE OF CURB UNLESS NOTED OTHERWISE.
2. FOR UTILITY WORK, SEE U-SHEETS.
3. FOR ELECTRICAL WORK, SEE E-SHEETS.
4. FOR LANDSCAPE WORK, SEE PP/IP/LD SHEETS.
5. FOR CONTROL LINE & MONUMENT INFORMATION, SEE SHEET S-1.

LEGEND

DEMOLITION AREA

LIMITS OF AC PVMT GRIND

A / X-1 — CROSS SECTION / SHEET NAME

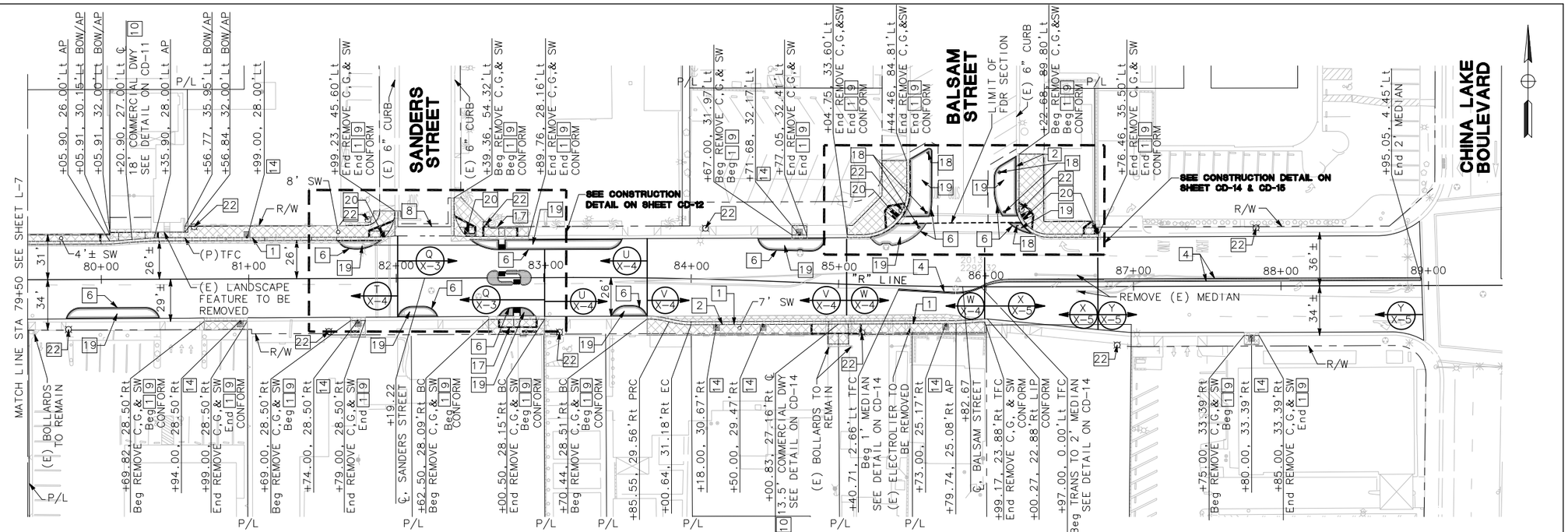

RIDGECREST BOULEVARD PLAN

SCALE: 1"= 40'

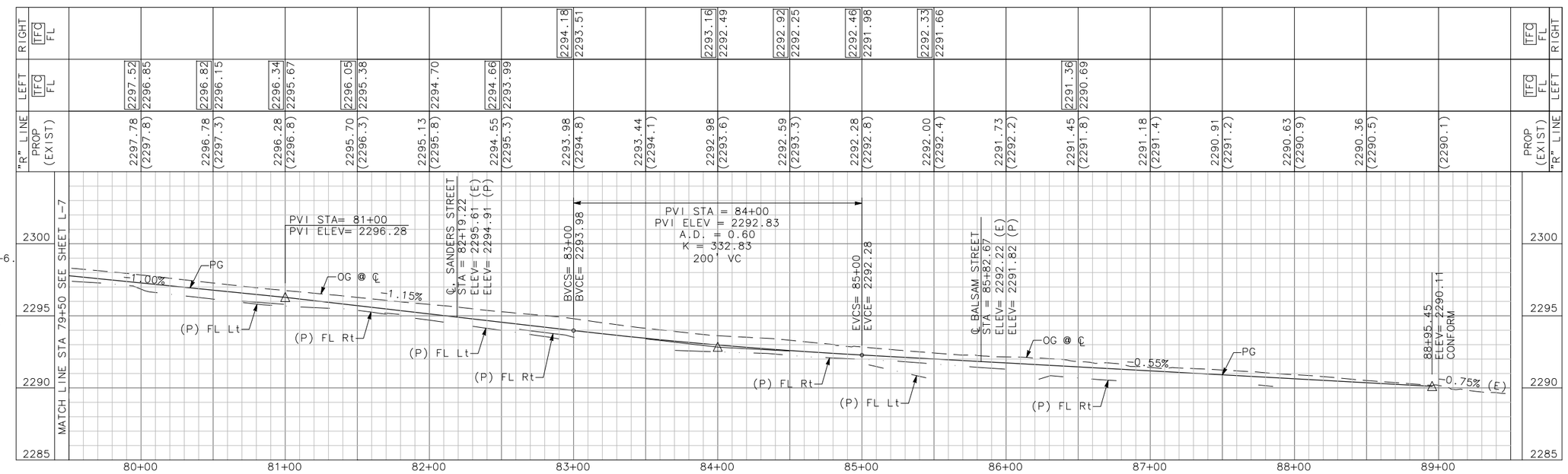

PROFILE

SCALE H: 1"= 40'
V: 1"= 4'

SHELF-READY PLANS - NOT FOR CONSTRUCTION

Project No.						
ST0101	CITY OF RIDGECREST W. RIDGECREST BOULEVARD RECONSTRUCTION PROJECT LAYOUT 79+50 TO 89+50	REGISTERED PROFESSIONAL ENGINEER EDGAR A. NORIEGA No. 61555 Exp. 6/30/13 CIVIL STATE OF CALIFORNIA	MARK THOMAS & COMPANY, INC. 7571 N REMINGTON AVENUE, SUITE 102 FRESNO, CALIFORNIA 93720 (559) 447-1938 FAX: (559) 447-8586 WWW.MARKTHOMAS.COM MTCO JOB NUMBER: FN-09105	DATE: 11/18/2011 SCALE: DRAWN BY: KS/MB/JL CK'D BY: CG DATE CK'D:	Revisions / Checked By / Date Checked	SHEET NO. 26 L-8 OF 90 SHEETS

PATH: V:\Ridgecrest - FN-09105 - Ridgecrest Blvd\CADD\Drawing\ FILE NAME: RCB_L-1-L-8 PLOT DATE: Jan 31, 2012-03:16:53pm CAD USER: ksmith

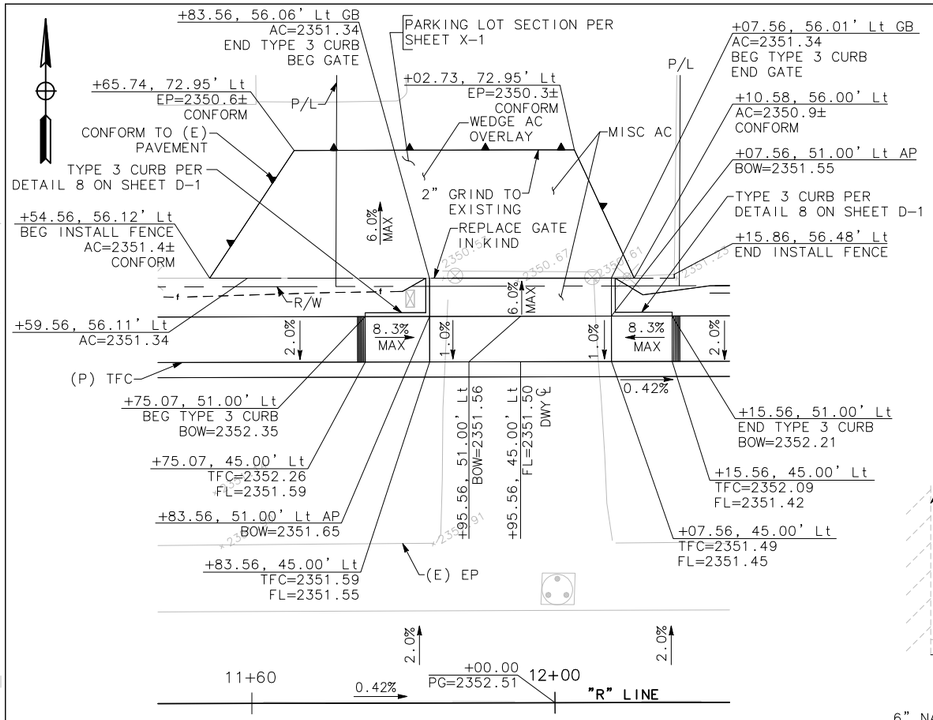

RIDGECREST BOULEVARD
STA 11+50 TO STA 12+50
SCALE: 1"=10'

(A)

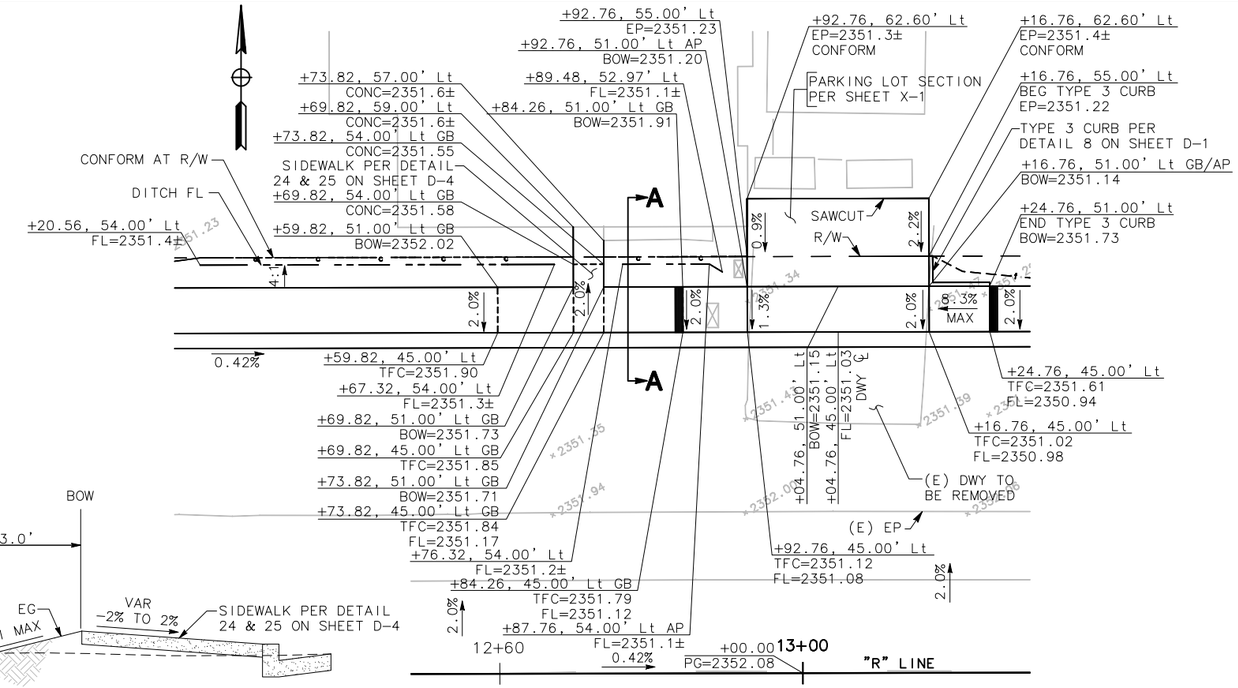

RIDGECREST BOULEVARD
STA 12+50 TO STA 13+30
SCALE: 1"=10'

(B)

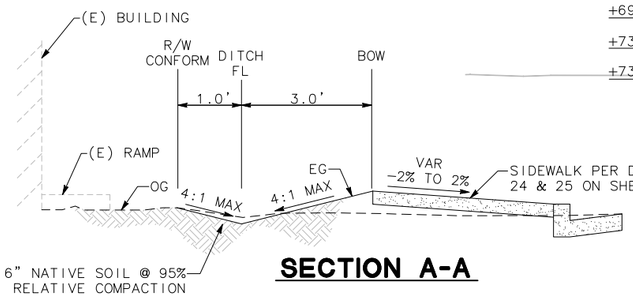

SECTION A-A

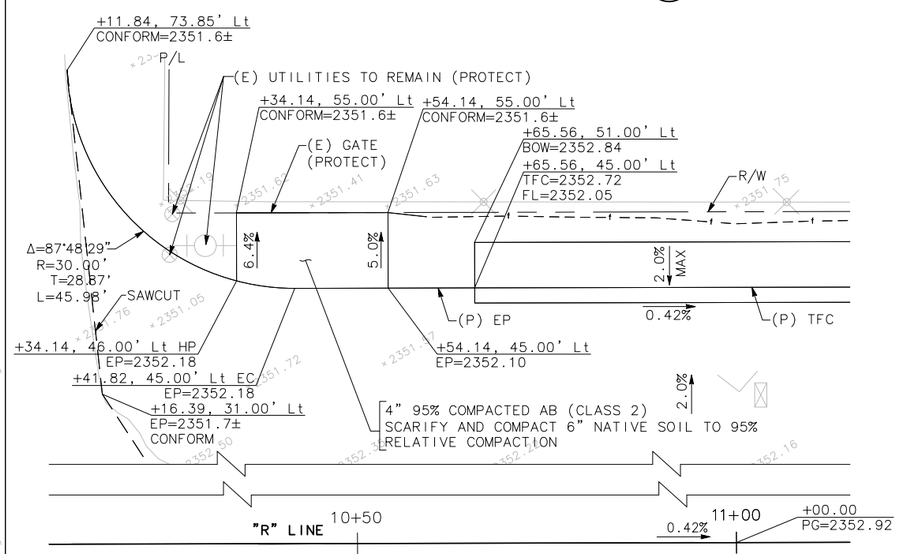

RIDGECREST BOULEVARD
STA 10+15 TO STA 11+15
SCALE: 1"=10'

(C)

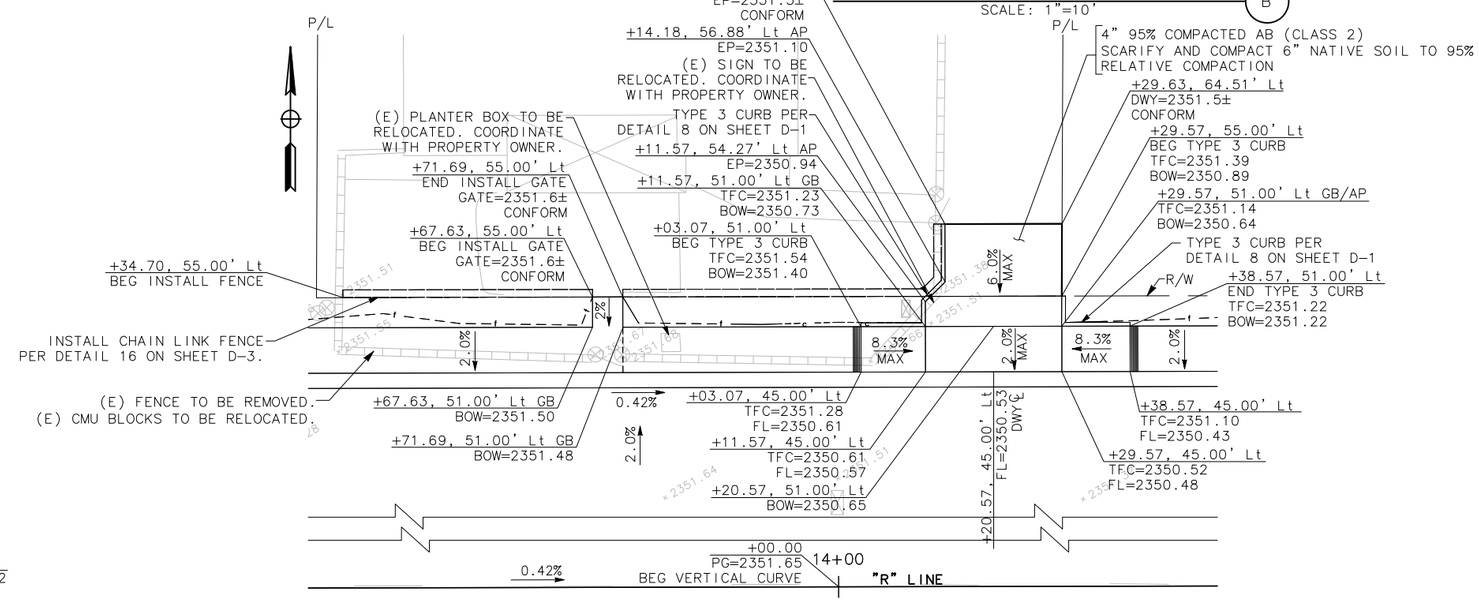

RIDGECREST BOULEVARD
STA 13+30 TO STA 14+50
SCALE: 1"=10'

(D)

SHELF-READY PLANS - NOT FOR CONSTRUCTION

Project No.							
ST0101	CITY OF RIDGECREST W. RIDGECREST BOULEVARD RECONSTRUCTION PROJECT CONSTRUCTION DETAILS	REGISTERED PROFESSIONAL ENGINEER EDGAR A. NORIEGA No. 61555 Exp. 6/30/13 CIVIL STATE OF CALIFORNIA	MARK THOMAS & COMPANY, INC. 7571 N REMINGTON AVENUE, SUITE 102 FRESNO, CALIFORNIA 93720 (559) 447-1938 FAX: (559) 447-8586 WWW.MARKTHOMAS.COM MTCO JOB NUMBER: FN-09105	DATE: 11/18/2011 SCALE: 1"=10' DRAWN BY: KS/MB/JL CK'D BY: CG DATE CK'D:	Revisions	Checked By	Date Checked	SHEET NO. 27 CD-1 OF 90 SHEETS

CAD USER: ksmith
PLOT DATE: Jan 31, 2012-03:17:10pm
FILE NAME: RCB_CD-1-CD-6
PATH: V:\Ridgecrest - FN-09105 - Ridgecrest Blvd\CADD\Drawing\

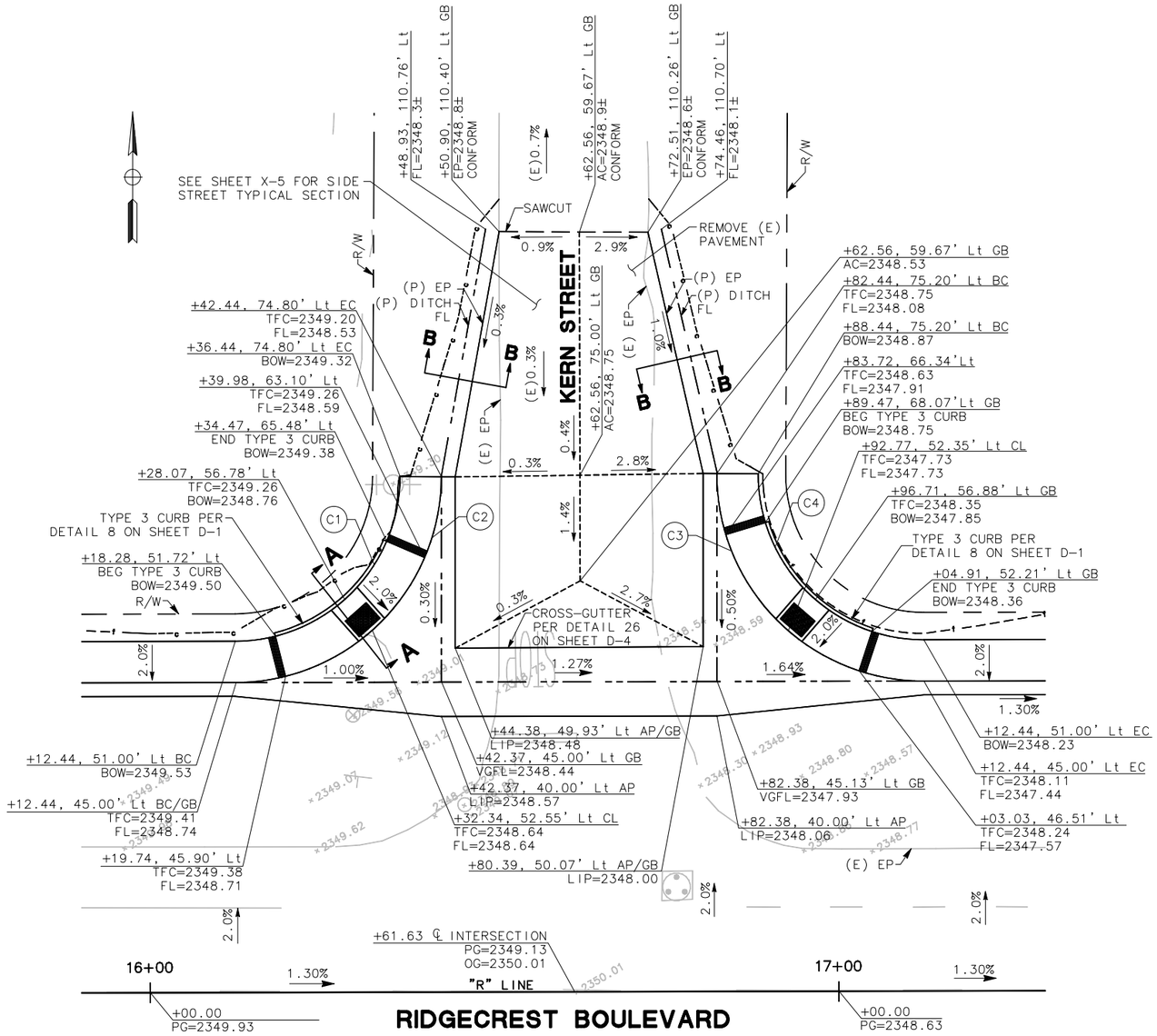

RIDGECREST BOULEVARD STA 15+90 TO STA 17+30

SCALE: 1"=10'

E

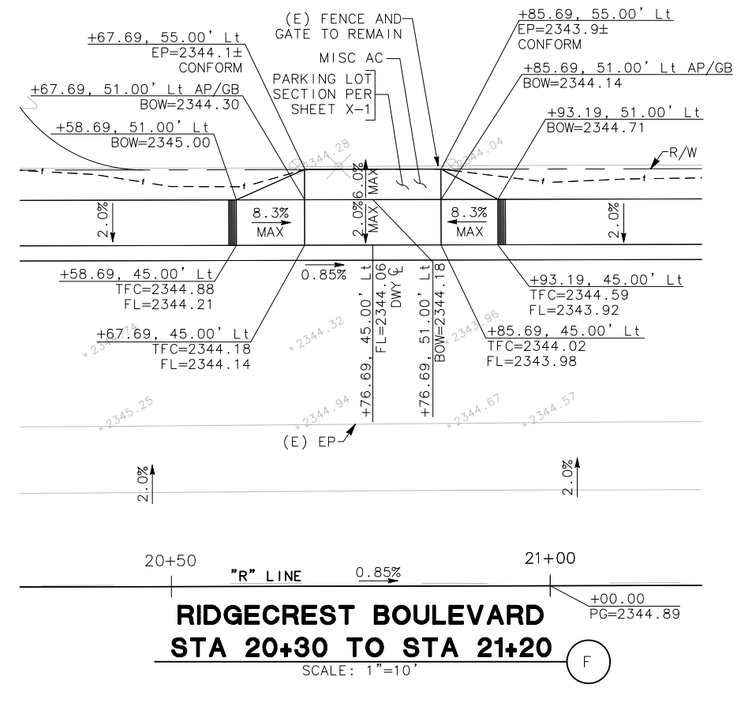

RIDGECREST BOULEVARD STA 20+30 TO STA 21+20

SCALE: 1"=10'

F

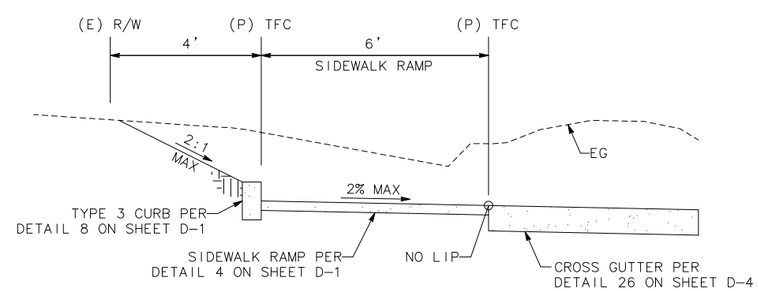

SECTION A-A

NTS

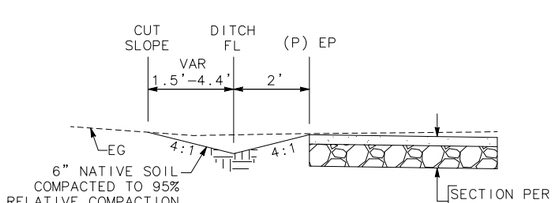

SECTION B-B

NTS

CURVE TABLE

CURVE ⓧ	RADIUS	DELTA	LENGTH	TANGENT
C1	24.00'	89°37'27"	37.54'	23.84'
C2	30.00'	89°37'27"	46.93'	29.80'
C3	30.00'	90°22'33"	47.32'	30.20'
C4	24.00'	90°22'33"	37.86'	24.16'

SHELF-READY PLANS - NOT FOR CONSTRUCTION

Project No.							
ST0101	CITY OF RIDGECREST W. RIDGECREST BOULEVARD RECONSTRUCTION PROJECT CONSTRUCTION DETAILS	REGISTERED PROFESSIONAL ENGINEER EDGAR A. NORIEGA No. 61555 Exp. 6/30/13 CIVIL STATE OF CALIFORNIA	MARK THOMAS & COMPANY, INC. 7571 N REMINGTON AVENUE, SUITE 102 FRESNO, CALIFORNIA 93720 (559) 447-1938 FAX: (559) 447-8586 WWW.MARKTHOMAS.COM MTCO JOB NUMBER: FN-09105	DATE: 11/18/2011 SCALE: 1"= 10' DRAWN BY: KS/MB/JL CK'D BY: CG DATE CK'D:	Revisions	Checked By	Date Checked	SHEET NO. 28 CD-2 OF 90 SHEETS

CAD USER: ksmith
PLOT DATE: Jan 31, 2012-03:17:17pm
FILE NAME: RCB_CD-1-CD-6
PATH: V:\Ridgecrest - FN-09105 - Ridgecrest Blvd\CADD\Drawing\

CURVE TABLE				
CURVE (X)	RADIUS	DELTA	LENGTH	TANGENT
C1	24.00'	89°36'35"	37.54'	23.84'
C2	30.00'	89°36'35"	46.92'	29.80'
C3	30.00'	90°23'25"	47.33'	30.21'
C4	24.00'	90°23'25"	37.86'	24.16'
C5	24.00'	89°36'20"	37.53'	23.84'
C6	30.00'	89°36'20"	46.92'	29.79'
C7	30.00'	90°23'40"	47.33'	30.21'
C8	24.00'	90°23'40"	37.86'	24.17'
C9	20.00'	89°36'33"	31.28'	19.86'

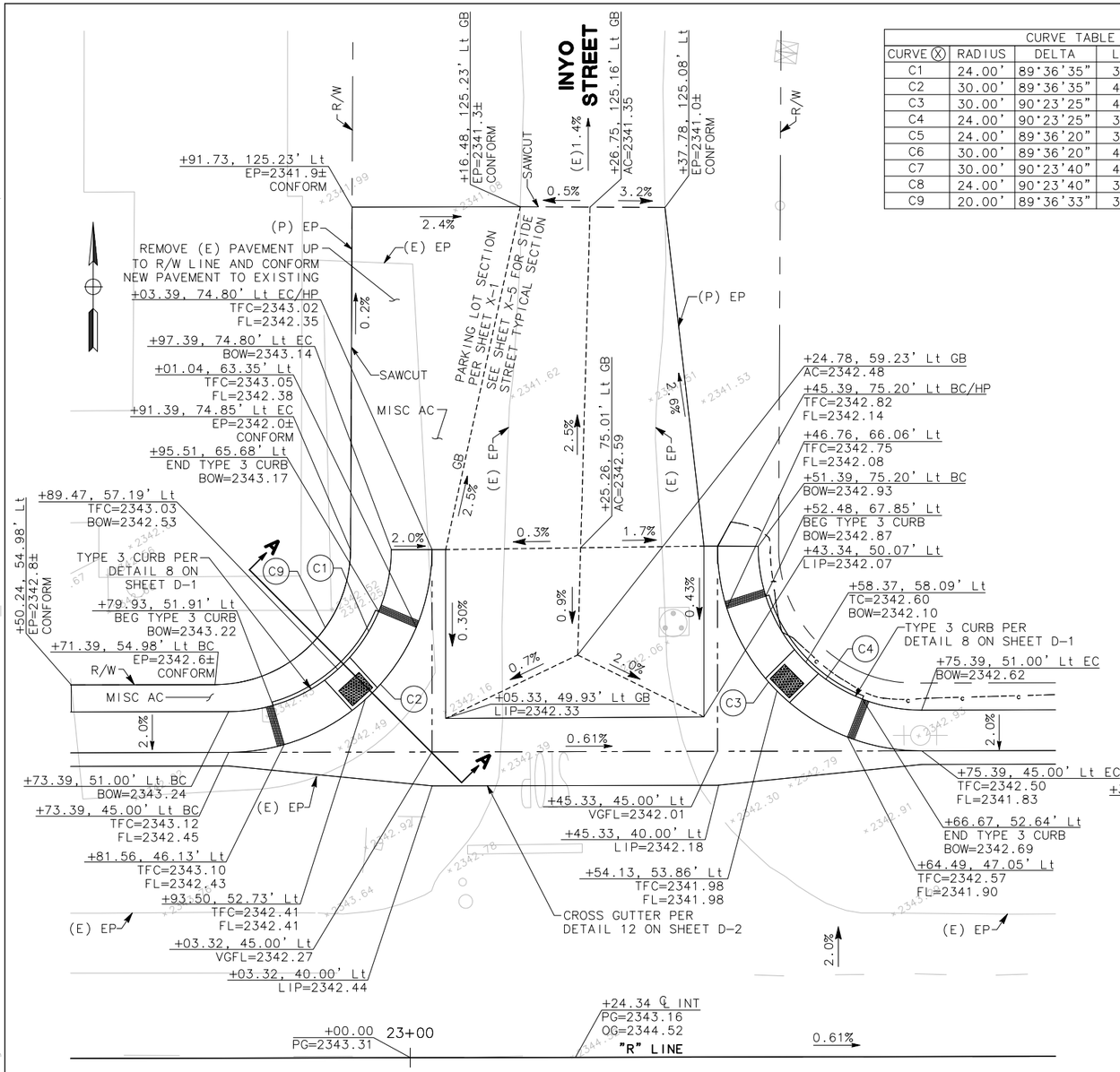

RIDGECREST BOULEVARD
STA 22+50 TO STA 23+95 (G)

SCALE: 1"=10'

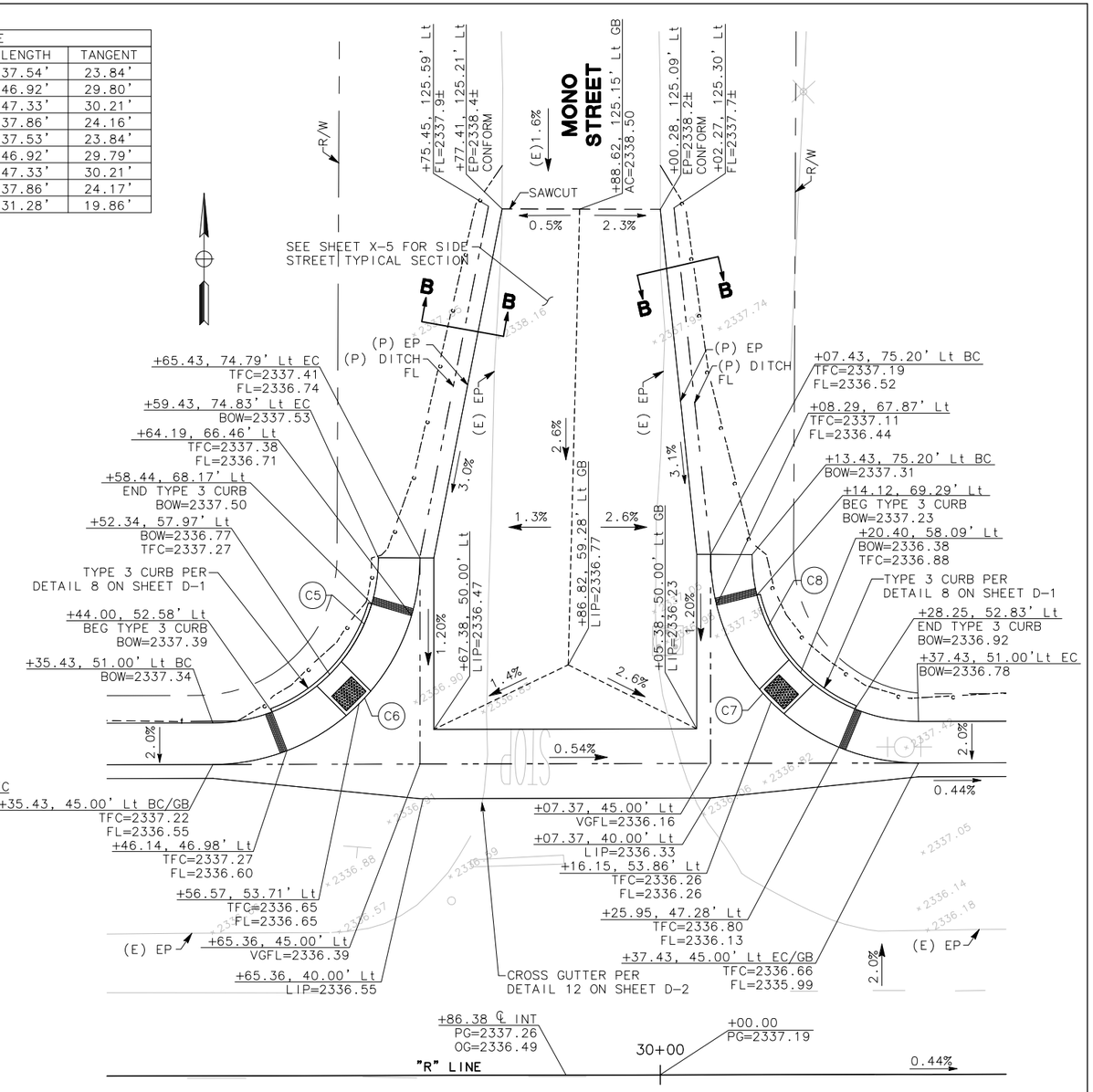

RIDGECREST BOULEVARD
STA 29+20 TO STA 30+50 (H)

SCALE: 1"=10'

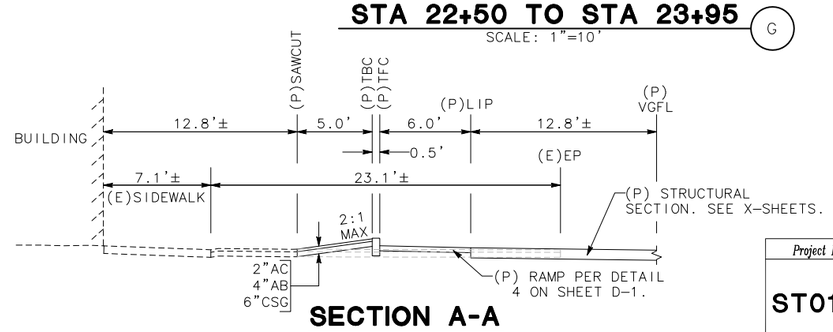

SECTION A-A

SCALE: NTS

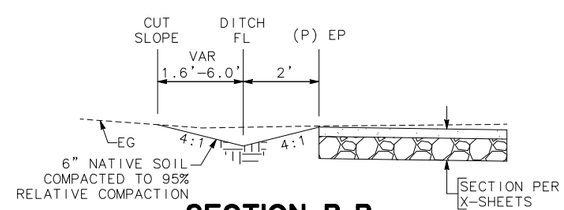

SECTION B-B

NTS

SHELF-READY PLANS - NOT FOR CONSTRUCTION

Project No.	CITY OF RIDGECREST W. RIDGECREST BOULEVARD RECONSTRUCTION PROJECT CONSTRUCTION DETAILS	RECEIVED PROFESSIONAL ENGINEER EDGAR A. NORIEGA No. 61555 Exp. 6/30/13 CIVIL STATE OF CALIFORNIA	MARK THOMAS & COMPANY, INC. 7571 N REMINGTON AVENUE, SUITE 102 FRESNO, CALIFORNIA 93720 (559) 447-1938 FAX: (559) 447-8586 WWW.MARKTHOMAS.COM MTCO JOB NUMBER: FN-09105	DATE: 11/18/2011 SCALE: 1"= 10' DRAWN BY: KS/MB/JL CK'D BY: GC DATE CK'D:	Revisions	Checked By	Date Checked	SHEET NO. 29 CD-3 OF 90 SHEETS
ST0101								

CAD USER: ksmith
PLOT DATE: Jan 31, 2012-03:17:22pm
FILE NAME: RCB_CD-1-CD-6
PATH: V:\Ridgecrest - FN-09105 - Ridgecrest Blvd\CADD\Drawing\

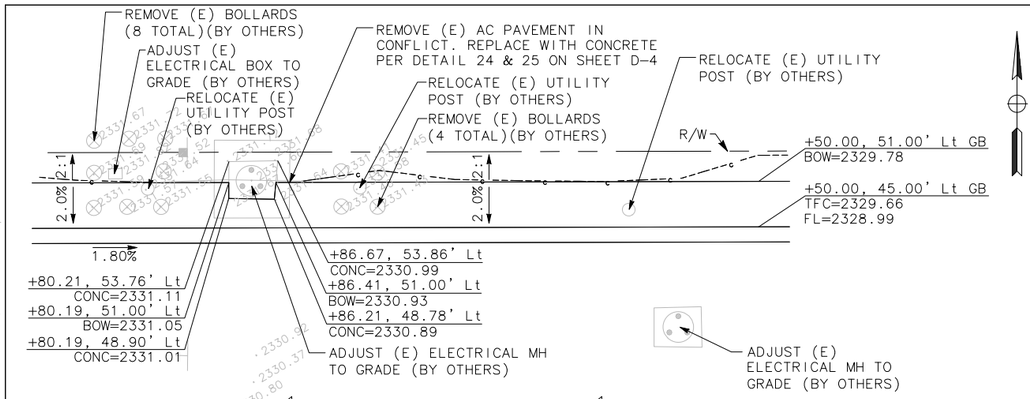

DETAIL "A"

SCALE: 1"=10'

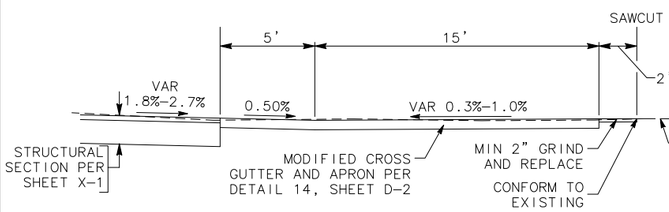

SECTION A-A

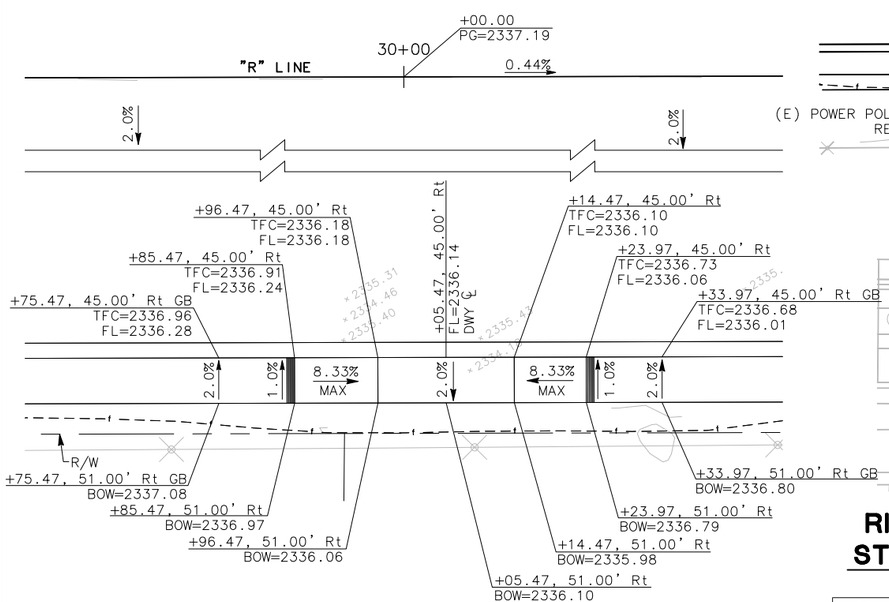

RIDGECREST BOULEVARD STA 29+30 TO STA 30+50

(I)

SCALE: 1"=10'

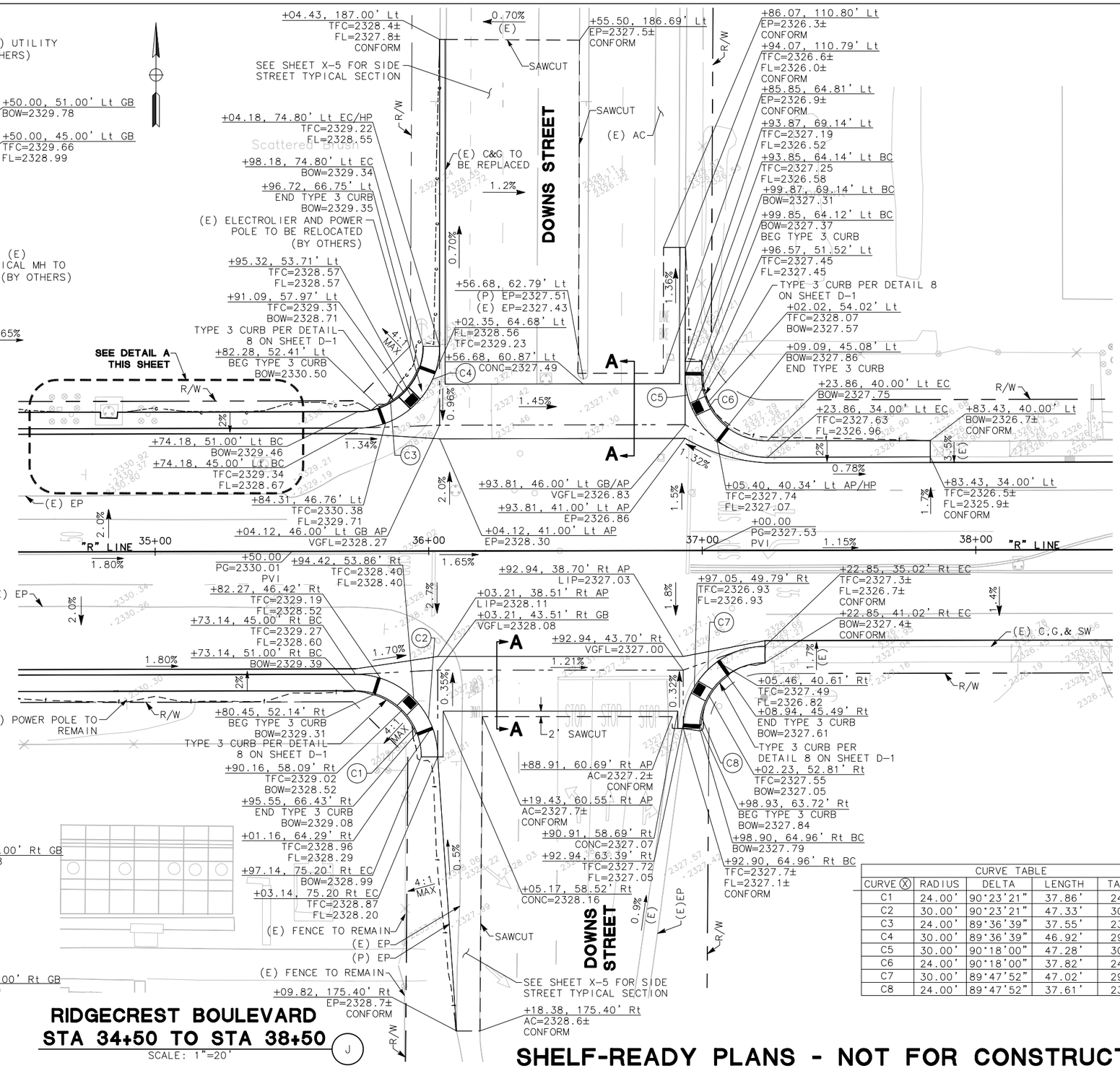

RIDGECREST BOULEVARD STA 34+50 TO STA 38+50

(J)

SCALE: 1"=20'

CURVE TABLE				
CURVE (X)	RADIUS	DELTA	LENGTH	TANGENT
C1	24.00'	90°23'21"	37.86'	24.16'
C2	30.00'	90°23'21"	47.33'	30.20'
C3	24.00'	89°36'39"	37.55'	23.84'
C4	30.00'	89°36'39"	46.92'	29.80'
C5	30.00'	90°18'00"	47.28'	30.16'
C6	24.00'	90°18'00"	37.82'	24.13'
C7	30.00'	89°47'52"	47.02'	29.89'
C8	24.00'	89°47'52"	37.61'	23.92'

SHELF-READY PLANS - NOT FOR CONSTRUCTION

Project No.					Revisions	Checked By	Date Checked	SHEET NO. 30
ST0101	CITY OF RIDGECREST W. RIDGECREST BOULEVARD RECONSTRUCTION PROJECT CONSTRUCTION DETAILS	REGISTERED PROFESSIONAL ENGINEER EDGAR A. NORIEGA No. 61555 Exp. 6/30/13 CIVIL STATE OF CALIFORNIA	MARK THOMAS & COMPANY, INC. 7571 N REMINGTON AVENUE, SUITE 102 FRESNO, CALIFORNIA 93720 (559) 447-1938 FAX: (559) 447-8586 WWW.MARKTHOMAS.COM MTCO JOB NUMBER: FN-09105	DATE: 11/18/2011 SCALE: 1"= 20' DRAWN BY: KS/MB/JL CK'D BY: GC DATE CK'D:				CD-4 OF 90 SHEETS

CAD USER: ksmith
PLOT DATE: Jan 31, 2012-03:17:29pm
FILE NAME: RCB_CD-1-CD-6
PATH: V:\Ridgecrest - FN-09105 - Ridgecrest Blvd\CADD\Drawing\

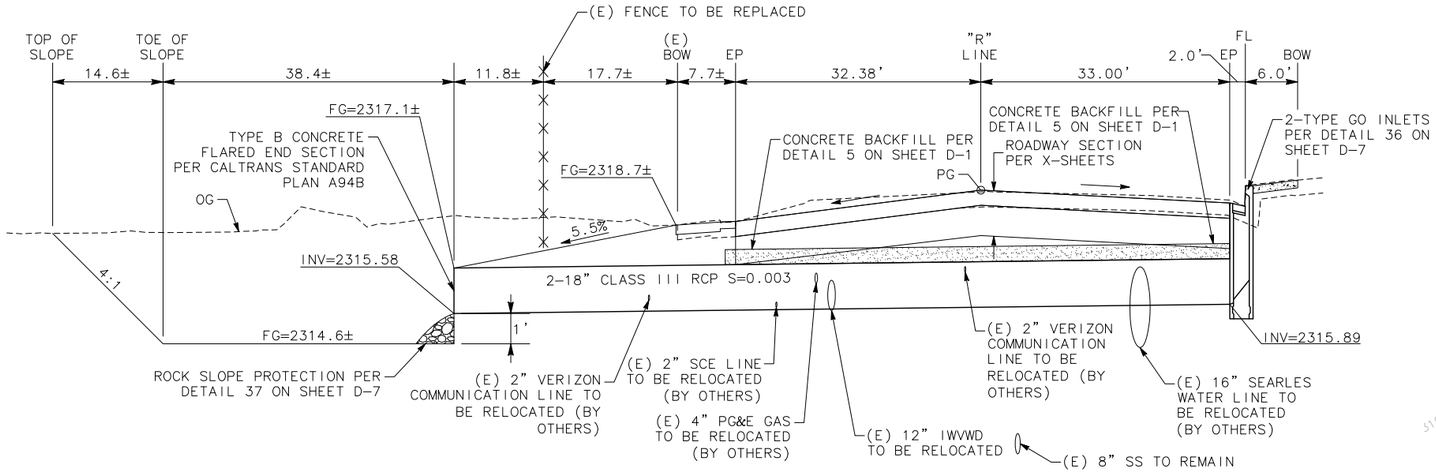

SECTION A-A

SCALE: NO SCALE

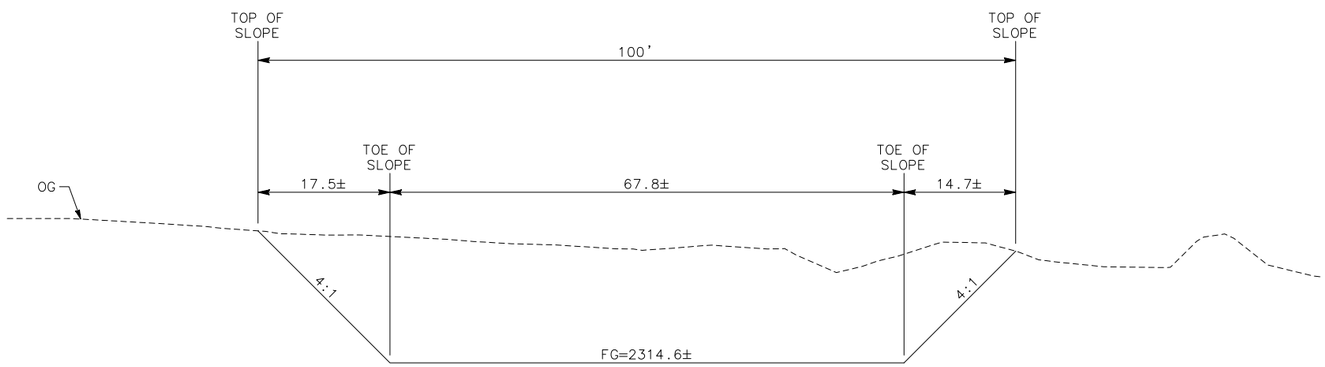

SECTION B-B

SCALE: NO SCALE

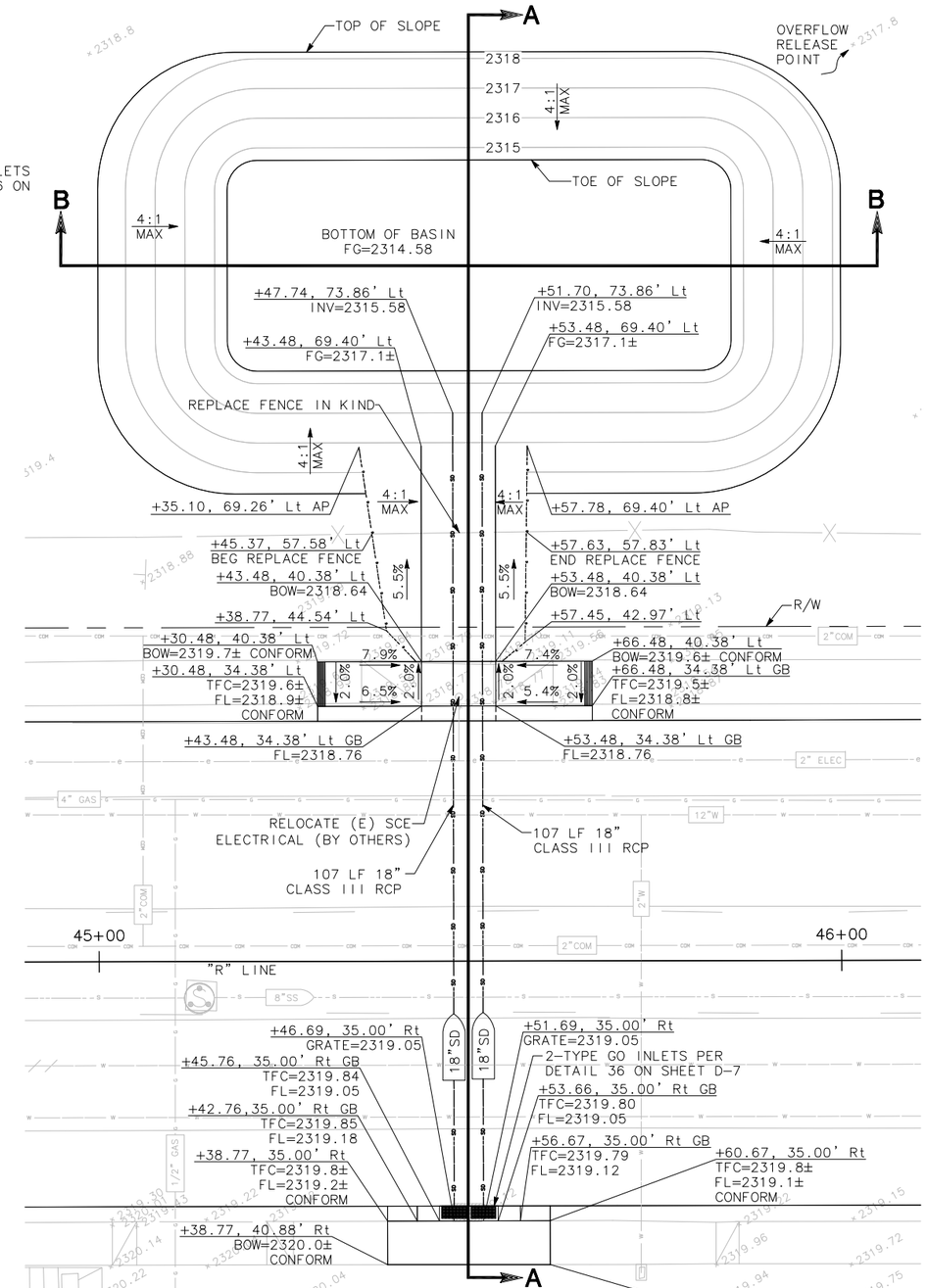

RIDGECREST BOULEVARD STA 44+90 TO STA 46+10

K

SCALE: 1"=10'

SHELF-READY PLANS - NOT FOR CONSTRUCTION

Project No.							
ST0101	CITY OF RIDGECREST W. RIDGECREST BOULEVARD RECONSTRUCTION PROJECT CONSTRUCTION DETAILS	REGISTERED PROFESSIONAL ENGINEER EDGAR A. NORIEGA No. 61555 Exp. 6/30/13 CIVIL STATE OF CALIFORNIA	MARK THOMAS & COMPANY, INC. 7571 N REMINGTON AVENUE, SUITE 102 FRESNO, CALIFORNIA 93720 (559) 447-1938 FAX: (559) 447-8586 WWW.MARKTHOMAS.COM MTCO JOB NUMBER: FN-09105	DATE: 11/18/2011 SCALE: 1"= 10' DRAWN BY: KS/MB/JL CK'D BY: CG DATE CK'D:	Revisions	Checked By	Date Checked	SHEET NO. 31 CD-5 OF 90 SHEETS

CAD USER: ksmith
PLOT DATE: Jan 31, 2012-03:17:32pm
FILE NAME: RCB_CD-1-CD-6
PATH: V:\Ridgecrest - FN-09105 - Ridgecrest Blvd\CADD\Drawing\

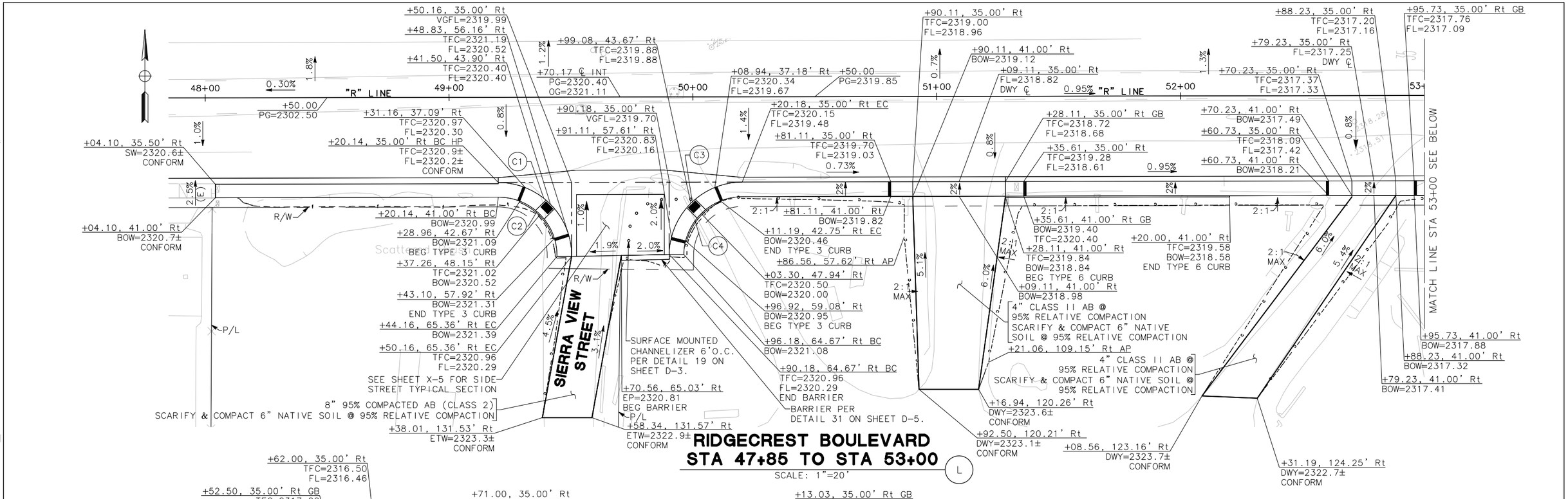

CURVE TABLE				
CURVE (X)	RADIUS	DELTA	LENGTH	TANGENT
C1	30.00'	90°44'52"	47.52'	30.39'
C2	24.00'	90°55'13"	38.08'	24.39'
C3	30.00'	89°22'16"	46.79'	29.67'
C4	24.00'	89°12'49"	37.37'	23.67'
C5	30.00'	88°58'16"	46.59'	29.47'
C6	24.00'	88°42'50"	37.16'	23.47'
C7	30.00'	89°49'27"	47.03'	29.91'
C8	24.00'	89°47'01"	37.61'	23.91'

SHELF-READY PLANS - NOT FOR CONSTRUCTION

Project No.			
ST0101	CITY OF RIDGECREST W. RIDGECREST BOULEVARD RECONSTRUCTION PROJECT CONSTRUCTION DETAILS	REGISTERED PROFESSIONAL ENGINEER EDGAR A. NORIEGA No. 61555 Exp. 6/30/13 CIVIL STATE OF CALIFORNIA	MARK THOMAS & COMPANY, INC. 7571 N REMINGTON AVENUE, SUITE 102 FRESNO, CALIFORNIA 93720 (559) 447-1938 FAX: (559) 447-8586 WWW.MARKTHOMAS.COM MTCO JOB NUMBER: FN-09105

DATE: 11/18/2011	Revisions	Checked By	Date Checked
SCALE: 1"= 20'			
DRAWN BY: KS/MB/JL			
CK'D BY: GC			
DATE CK'D:			

SHEET NO. 32

CD-6

OF 90 SHEETS

PATH: V:\Ridgecrest - FN-09105 - Ridgecrest Blvd\CADD\Drawing\ FILE NAME: RCB_CD-1-CD-6 PLOT DATE: Jan 31, 2012-03:17:35pm CAD USER: ksmith

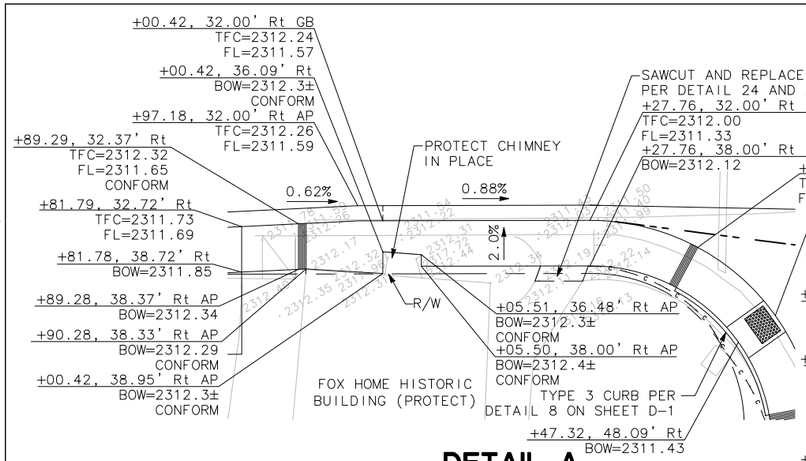

DETAIL A

SCALE: 1"=10'

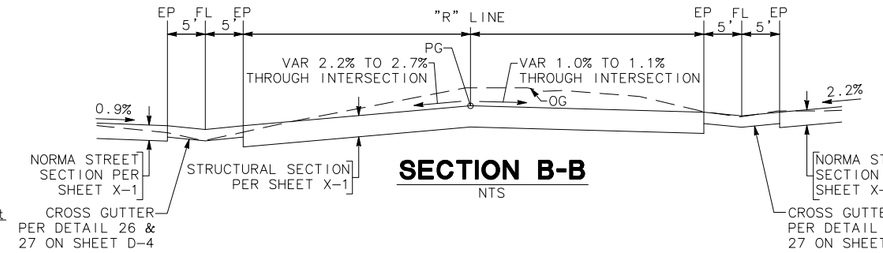

SECTION B-B

NTS

CURVE TABLE				
CURVE (X)	RADIUS	DELTA	LENGTH	TANGENT
C1	24.00'	90°35'14"	37.95'	24.25'
C2	30.00'	90°35'14"	47.43'	30.31'
C3	30.00'	89°51'27"	47.05'	29.93'
C4	24.00'	82°02'41"	34.37'	20.88'
C5	30.00'	84°18'09"	44.14'	27.16'
C6	25.50'	84°18'09"	37.52'	23.08'
C7	30.00'	86°08'48"	45.11'	28.05'
C8	24.00'	75°54'24"	31.80'	18.72'
C9	4.00'	91°58'41"	6.42'	4.14'
C10	4.00'	87°25'35"	6.10'	3.82'
C11	10.00'	73°09'20"	12.77'	7.42'
C12	10.00'	73°37'59"	12.85'	7.49'

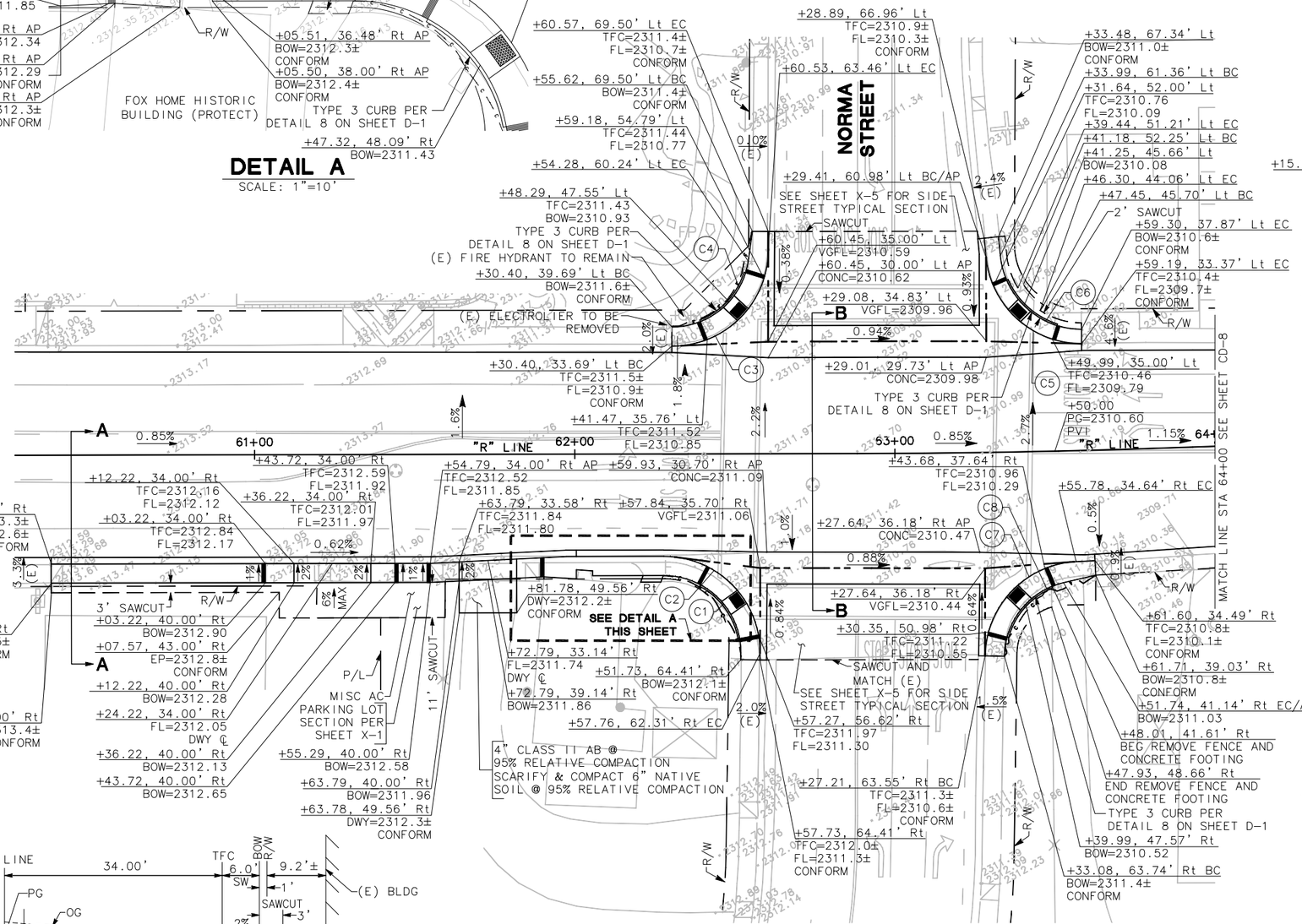

RIDGECREST BOULEVARD
STA 60+25 TO STA 64+00

SCALE: 1"=20'

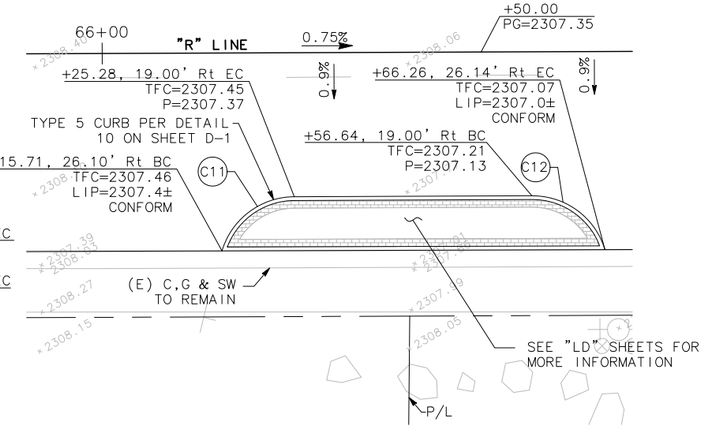

RIDGECREST BOULEVARD
STA 65+90 TO STA 66+70

SCALE: 1"=10'

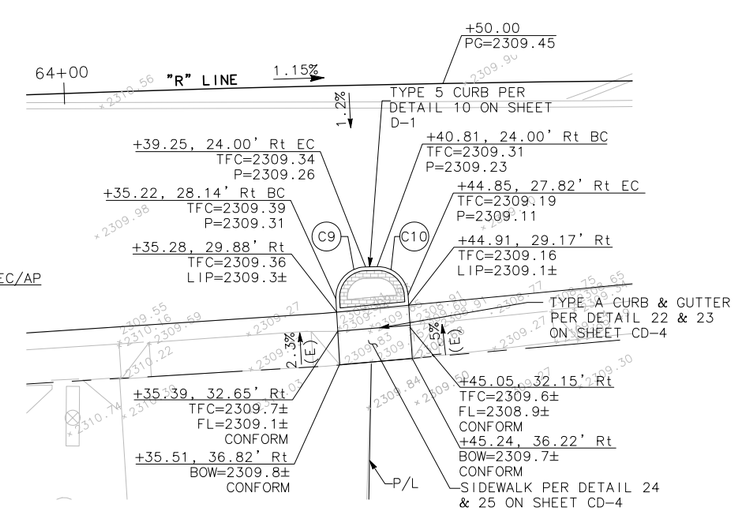

RIDGECREST BOULEVARD
STA 63+95 TO STA 64+75

SCALE: 1"=10'

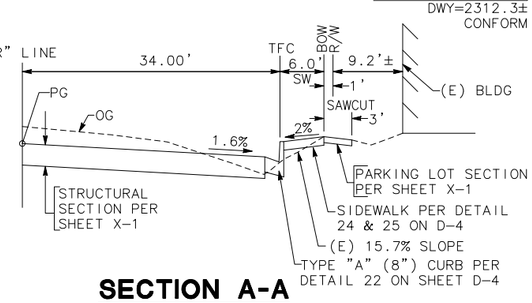

SECTION A-A

NTS

SHELF-READY PLANS - NOT FOR CONSTRUCTION

Project No.							
ST0101	CITY OF RIDGECREST W. RIDGECREST BOULEVARD RECONSTRUCTION PROJECT CONSTRUCTION DETAILS	REGISTERED PROFESSIONAL ENGINEER EDGAR A. NORIEGA No. 61555 Exp. 6/30/13 CIVIL STATE OF CALIFORNIA	MARK THOMAS & COMPANY, INC. 7571 N REMINGTON AVENUE, SUITE 102 FRESNO, CALIFORNIA 93720 (559) 447-1938 FAX: (559) 447-8586 WWW.MARKTHOMAS.COM MTCO JOB NUMBER: FN-09105	DATE: 11/18/2011 SCALE: VARIES DRAWN BY: KS/MB/JL CK'D BY: CG DATE CK'D:	Revisions	Checked By	Date Checked	SHEET NO. 33 CD-7 OF 90 SHEETS

CAD USER: ksmith
PLOT DATE: Jan 31, 2012-03:17:50pm
FILE NAME: RCB_CD-7-CD-15
PATH: V:\Ridgecrest - FN-09105 - Ridgecrest Blvd\CADD\Drawing\

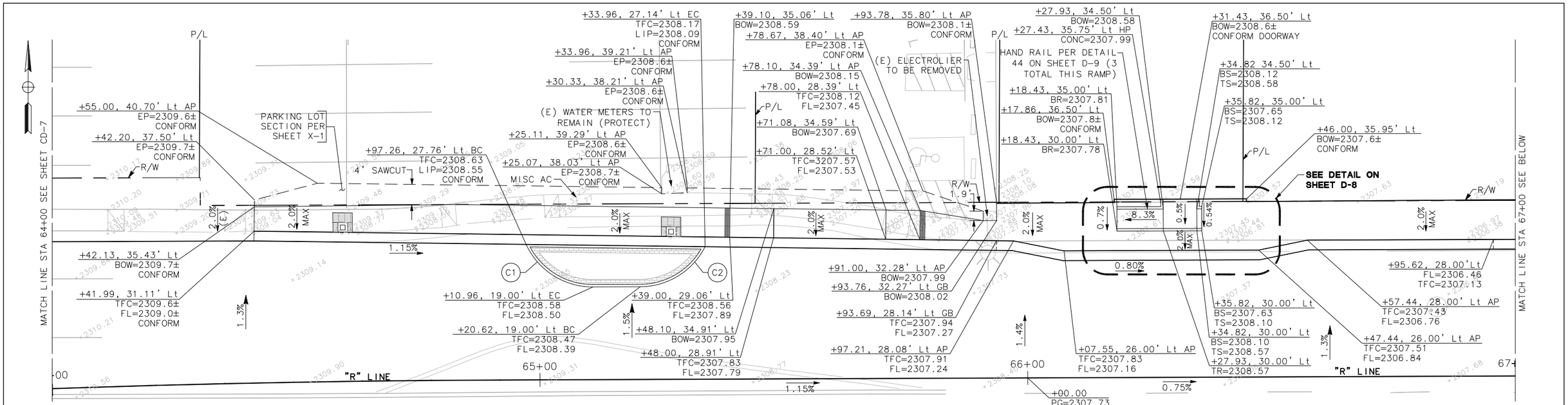

RIDGECREST BOULEVARD
STA 64+00 TO STA 67+00

SCALE: 1"=10'

Q

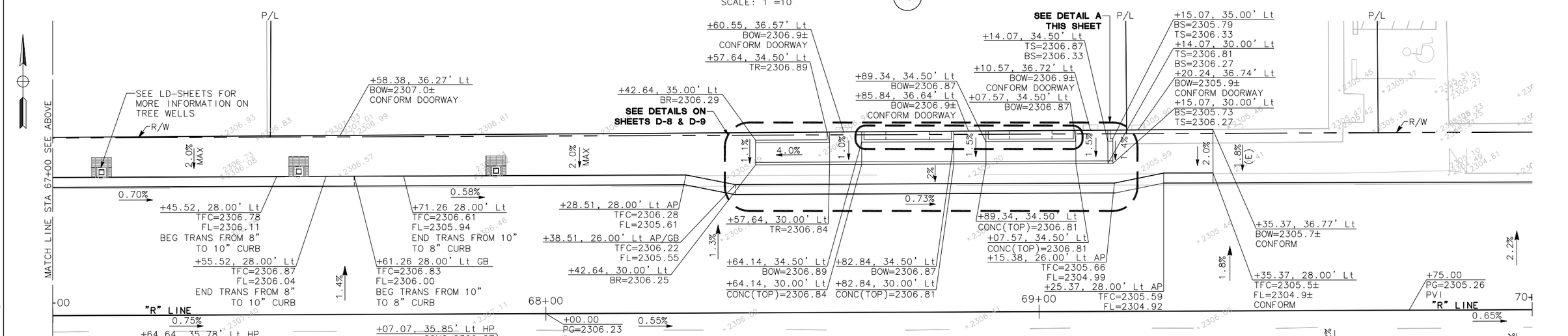

RIDGECREST BOULEVARD
STA 67+00 TO STA 70+00

SCALE: 1"=10'

R

DETAIL A

SCALE: 1"=5'

SHELF-READY PLANS - NOT FOR CONSTRUCTION

Project No.							
ST0101	CITY OF RIDGECREST W. RIDGECREST BOULEVARD RECONSTRUCTION PROJECT CONSTRUCTION DETAILS	REGISTERED PROFESSIONAL ENGINEER EDGAR A. NORIEGA No. 61555 Exp. 6/30/13 CIVIL STATE OF CALIFORNIA	MARK THOMAS & COMPANY, INC. 7571 N REMINGTON AVENUE, SUITE 102 FRESNO, CALIFORNIA 93720 (559) 447-1938 FAX: (559) 447-8586 WWW.MARKTHOMAS.COM MTCO JOB NUMBER: FN-09105	DATE: 11/18/2011 SCALE: 1"= 10' DRAWN BY: KS/MB/JL CK'D BY: CG DATE CK'D:	Revisions	Checked By	Date Checked	SHEET NO. 34 CD-8 OF 90 SHEETS

PATH: V:\Ridgecrest - FN-09105 - Ridgecrest Blvd\CADD\Drawing\
FILE NAME: RCB_CD-7-CD-15
PLOT DATE: Jan 31, 2012-03:17:54pm
CAD USER: ksmith

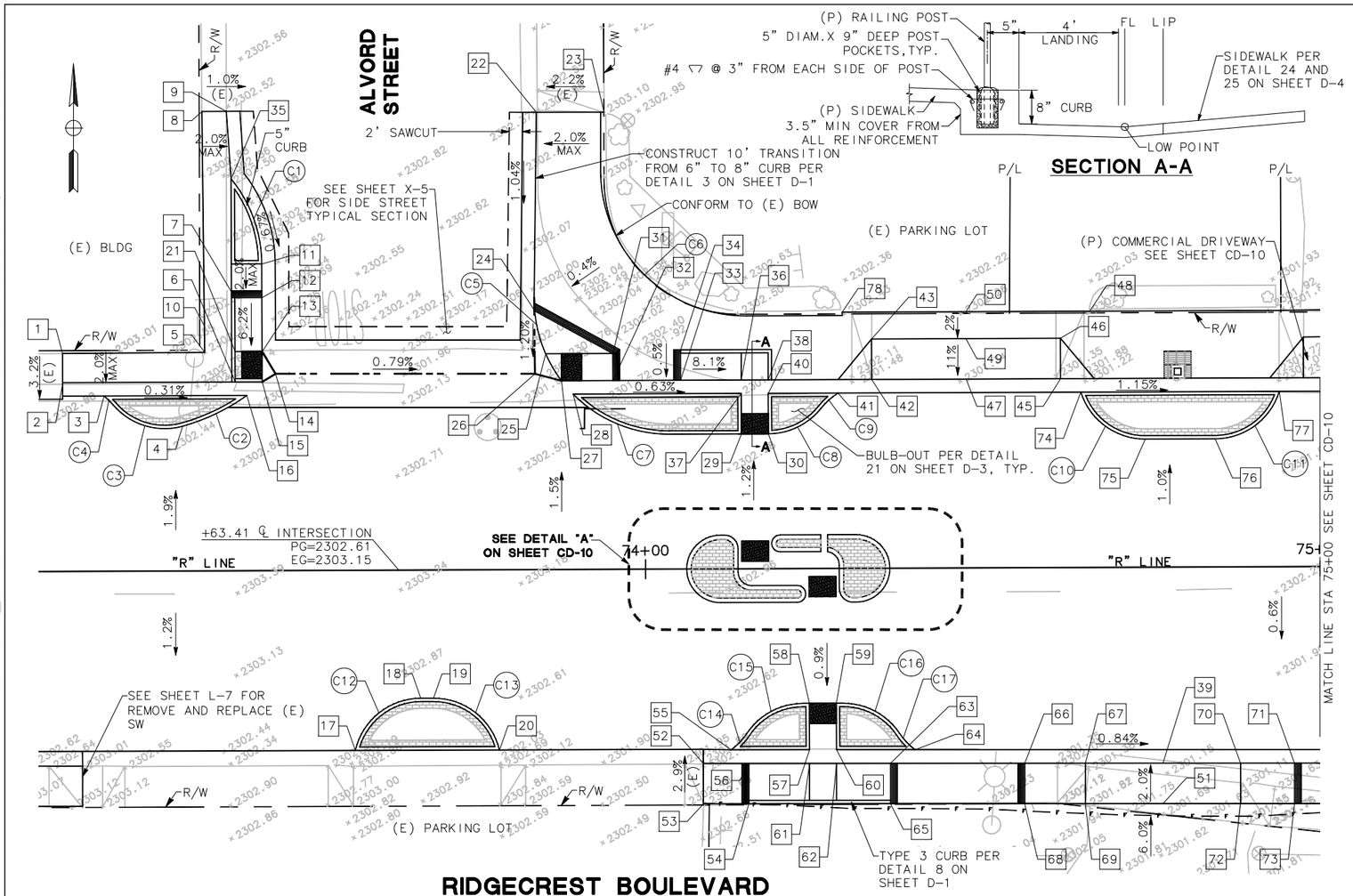

RIDGECREST BOULEVARD
STA 73+10 TO STA 75+00 (S)

SCALE: 1"=10'

CURVE ⓧ	BC	EC	R	△	T	L
C1	73+38.77, 58.14' Lt	73+43.27, 45.50' Lt	22.00'	37°29'53"	7.47'	14.40'
C2	73+31.43, 21.48' Lt	73+40.97, 26.00' Lt	30.00'	20°16'58"	5.37'	10.62'
C3	73+21.17, 24.67' Lt	73+40.97, 26.00' Lt	10.00'	64°58'11"	6.37'	11.34'
C4	73+19.80, 26.00' Lt	73+21.17, 24.67' Lt	10.00'	10°57'01"	0.96'	1.91'
C5	73+83.64, 40.31' Lt	73+87.64, 28.00' Lt	20.00'	37°46'14"	6.84'	13.18'
C6	73+93.57, 58.58' Lt	74+15.06, 37.50' Lt	21.50'	88°52'58"	21.08'	33.35'
C7	73+89.36, 26.00' Lt	74+03.64, 20.00' Lt	20.00'	45°34'23"	8.40'	15.91'
C8	73+18.29, 20.00' Lt	73+26.09, 23.75' Lt	10.00'	51°19'04"	4.80'	8.96'
C9	73+26.09, 23.75' Lt	73+28.63, 26.00' Lt	10.00'	19°31'46"	1.72'	3.41'
C10	73+64.63, 26.00' Lt	73+74.17, 19.00' Lt	10.00'	72°32'33"	7.34'	12.66'
C11	73+84.52, 19.00' Lt	73+94.06, 26.00' Lt	10.00'	72°32'34"	7.34'	12.66'
C12	73+56.85, 26.71' Rt	73+66.59, 19.00' Rt	10.00'	76°45'44"	7.92'	13.40'
C13	73+68.48, 19.00' Rt	73+78.23, 26.77' Rt	10.00'	76°52'23"	7.94'	13.42'
C14	74+12.59, 26.84' Rt	74+14.91, 24.41' Rt	10.00'	19°21'12"	1.71'	3.38'
C15	74+14.91, 24.41' Rt	74+23.20, 20.00' Rt	10.00'	56°00'38"	5.32'	9.78'
C16	74+29.20, 20.00' Rt	74+37.54, 24.48' Rt	10.00'	56°30'46"	5.37'	9.86'
C17	74+37.54, 24.48' Rt	74+39.85, 26.94' Rt	10.00'	19°25'49"	1.71'	3.39'
C18	70+18.06, 25.86' Lt	70+27.55, 19.00' Lt	10.00'	71°41'59"	7.23'	12.51'
C19	70+43.36, 19.00' Lt	70+52.84, 25.82' Lt	10.00'	71°28'23"	7.20'	12.47'

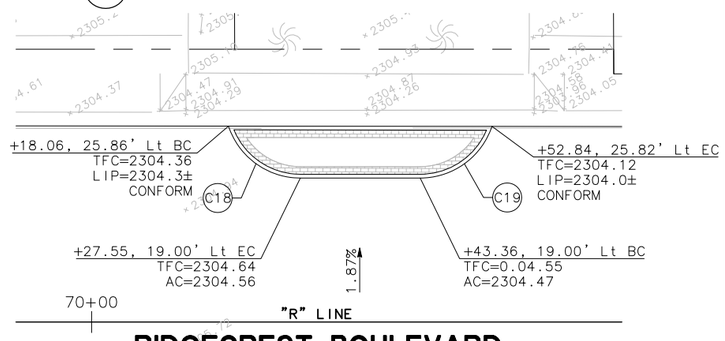

RIDGECREST BOULEVARD
STA 69+90 TO STA 70+70 (T)

SCALE: 1"=10'

No.	LOCATION	DESC	ELEVATION
1	73+13.68, 32.32 Lt	C BOW	2303.1±
2	73+13.68, 28.00 Lt	C TFC	2303.0±
		C FL	2302.4±
3	73+19.80, 26.00 Lt BC	TFC	2302.58
		LIP	2302.50
4	73+31.43, 21.48' Lt BC/EC	TFC	2302.55
		FL	2302.47
5	73+34.77, 32.40' Lt	C BOW	2302.8±
6	73+39.27, 28.00' Lt	TFC	2302.69
		FL	2302.27
7	73+39.27, 40.50' Lt	CONC	2302.82
8	73+34.49, 68.14' Lt	C BOW	2302.9±
9	73+38.11, 68.14' Lt	C TFC	2303.0±
		C FL	2302.5±
10	73+34.74, 36.31' Lt	C BOW	2302.9±
11	73+43.27, 45.50' Lt EC	TFC	2302.78
		FL	2302.36
12	73+43.27, 40.50' Lt	TFC	2302.75
		FL	2302.33
13	73+43.27, 32.50' Lt	TFC	2302.28
		FL	2302.28
14	73+45.25, 29.20' Lt GB	VGFL	2302.25
15	73+43.27, 28.00' Lt	TFC	2302.68
		FL	2302.26
16	73+40.97, 26.00' Lt EC	TFC	2302.50
		LIP	2302.42
17	73+56.85, 26.71' Rt BC	TFC	2302.44
		LIP	2302.36
18	73+66.59, 19.00' Rt EC	TFC	2302.45
		AC	2302.37
19	73+68.48, 19.00' Rt BC	TFC	2302.44
		AC	2302.36
20	73+78.23, 26.77' Rt EC	TFC	2302.28
		LIP	2302.20
21	73+39.27, 32.50' Lt	TFC	2302.82
		FL	2302.26
22	73+84.08, 67.82' Lt	C TFC	2302.9±
		C FL	2302.4±
23	73+94.11, 67.80' Lt	C BOW	2303.1±
		TFC	2303.60
24	73+83.71, 38.38' Lt GB	TFC	2302.73
		FL	2302.06
25	73+85.31, 32.00' Lt	TFC	2301.98
		FL	2301.98
26	73+83.71, 29.05' Lt AP/GB	VGFL	2301.95
27	73+87.64, 28.00' Lt	TFC	2301.92
		FL	2301.92
28	73+89.36, 26.00' Lt	TFC	2302.16
		LIP	2302.08
29	74+14.29, 20.00' Lt	TFC	2302.01
		CONC	2301.93
30	74+18.29, 20.00' Lt BC	TFC	2301.98
		CONC	2301.90
31	73+95.28, 32.00' Lt	CONC	2302.56
32	73+95.28, 28.00' Lt	TFC	2302.54
		FL	2301.87
33	74+05.29, 28.00' Lt	TFC	2302.49
		FL	2301.82
34	74+05.31, 32.50' Lt	CONC	2302.51
35	74+38.77, 58.14' Lt BC	TFC	2302.87
		FL	2302.45
36	74+14.29, 28.00' Lt	TFC	2301.75
		FL	2301.75
37	74+14.29, 26.00' Lt	TFC	2301.93
		LIP	2301.85

No.	LOCATION	DESC	ELEVATION
38	74+18.29, 28.00' Lt	TFC	2302.40
		FL	2301.73
39	74+76.60, 29.08' Rt	TFC	2301.38
		FL	2301.34
40	74+18.29, 26.00' Lt	TFC	2301.91
		LIP	2301.83
41	74+28.63, 26.00' Lt EC	TFC	2301.91
		LIP	2301.83
42	74+33.63, 28.00' Lt	TFC	2301.67
		FL	2301.63
43	74+33.63, 34.00' Lt	Dwy	2302.32
44	74+33.63, 38.00' Lt	BOW	2302.03
45	74+61.63, 28.00' Lt	TFC	2301.49
		FL	2301.45
46	74+61.63, 34.00' Lt	Dwy	2302.10
47	74+47.63, 28.00' Lt	TFC	2301.58
		FL	2301.54
48	74+66.00, 38.00' Lt	C AC	2302.1±
49	74+47.63, 34.00' Lt	Dwy CL	2302.21
50	74+47.63, 38.00' Lt	BOW	2302.29
51	74+76.60, 35.08' Rt	BOW	2301.50
52	74+08.46, 28.83' Rt	C TFC	2302.5±
		C FL	2301.9±
53	74+08.43, 34.83' Rt	C BOW	2302.7±
54	74+15.18, 34.85' Rt	BOW	2302.62
55	74+12.59, 26.84' Rt BC	TFC	2302.11
		LIP	2302.03
56	74+15.20, 28.85' Rt	TFC	2302.50
		FL	2301.83
57	74+24.20, 26.88' Rt	TFC	2301.94
		LIP	2301.86
58	74+24.20, 20.00' Rt	CONC	2301.92
59	74+28.20, 20.00' Rt	CONC	2301.88
60	74+28.20, 26.90' Rt	TFC	2301.91
		LIP	2301.83
61	74+24.20, 28.88' Rt	TFC	2301.76
		FL	2301.76
62	74+28.20, 28.90' Rt	TFC	2301.73
		FL	2301.73
63	74+37.20, 28.93' Rt	TFC	2302.34
		FL	2301.67
64	74+39.85, 26.94' Rt EC	TFC	2301.89
		LIP	2301.81
65	74+37.18, 34.93' Rt	BOW	2302.46
66	74+57.10, 29.01' Rt	TFC	2302.16
		FL	2301.49
67	74+65.10, 29.04' Rt	TFC	2301.48
		FL	2301.44
68	74+57.08, 35.01' Rt	BOW	2302.28
69	74+65.08, 35.04' Rt	BOW	2301.60
70	74+88.10, 29.12' Rt	TFC	2301.29
		FL	2301.25
71	74+96.10, 29.15' Rt	TFC	2301.86
		FL	2301.19
72	74+88.08, 35.12' Rt	BOW	2301.41
73	74+96.08, 35.15' Rt	BOW	2301.98
74	74+64.63, 26.00' Lt BC	TFC	2301.68
		LIP	2301.60
75	74+74.17, 19.00' Lt EC/HP	TFC	2301.63
		AC	2301.55
76	74+84.52, 19.00' Lt BC	TFC	2301.52
		AC	2301.44
77	74+94.06, 26.00' Lt EC	TFC	2301.35
		LIP	2301.27
78	74+29.29, 38.00' Lt	C AC	2302.4±
		TFC	2302.93

SHELF-READY PLANS - NOT FOR CONSTRUCTION

Project No.	
ST0101	CITY OF RIDGECREST W. RIDGECREST BOULEVARD RECONSTRUCTION PROJECT CONSTRUCTION DETAILS

REGISTERED PROFESSIONAL ENGINEER — EDGAR A. NORIEGA — No. 61555 — Exp. 6/30/13 — CIVIL — STATE OF CALIFORNIA

MARK THOMAS & COMPANY, INC.
7571 N REMINGTON AVENUE, SUITE 102
FRESNO, CALIFORNIA 93720
(559) 447-1938 FAX: (559) 447-8586
WWW.MARKTHOMAS.COM
MTCO JOB NUMBER: FN-09105

DATE: 11/18/2011
SCALE: 1" = 10'
DRAWN BY: KS/MB/JL
CK'D BY: GC
DATE CK'D:

Revisions	Checked By	Date Checked

SHEET NO. 35

CD-9

OF 90 SHEETS

PATH: V:\Ridgecrest - FN-09105 - Ridgecrest Blvd\CADD\Drawing\
FILE NAME: RCB_CD-7-CD-15
PLOT DATE: Jan 31, 2012-03:18:02pm
CAD USER: ksmith

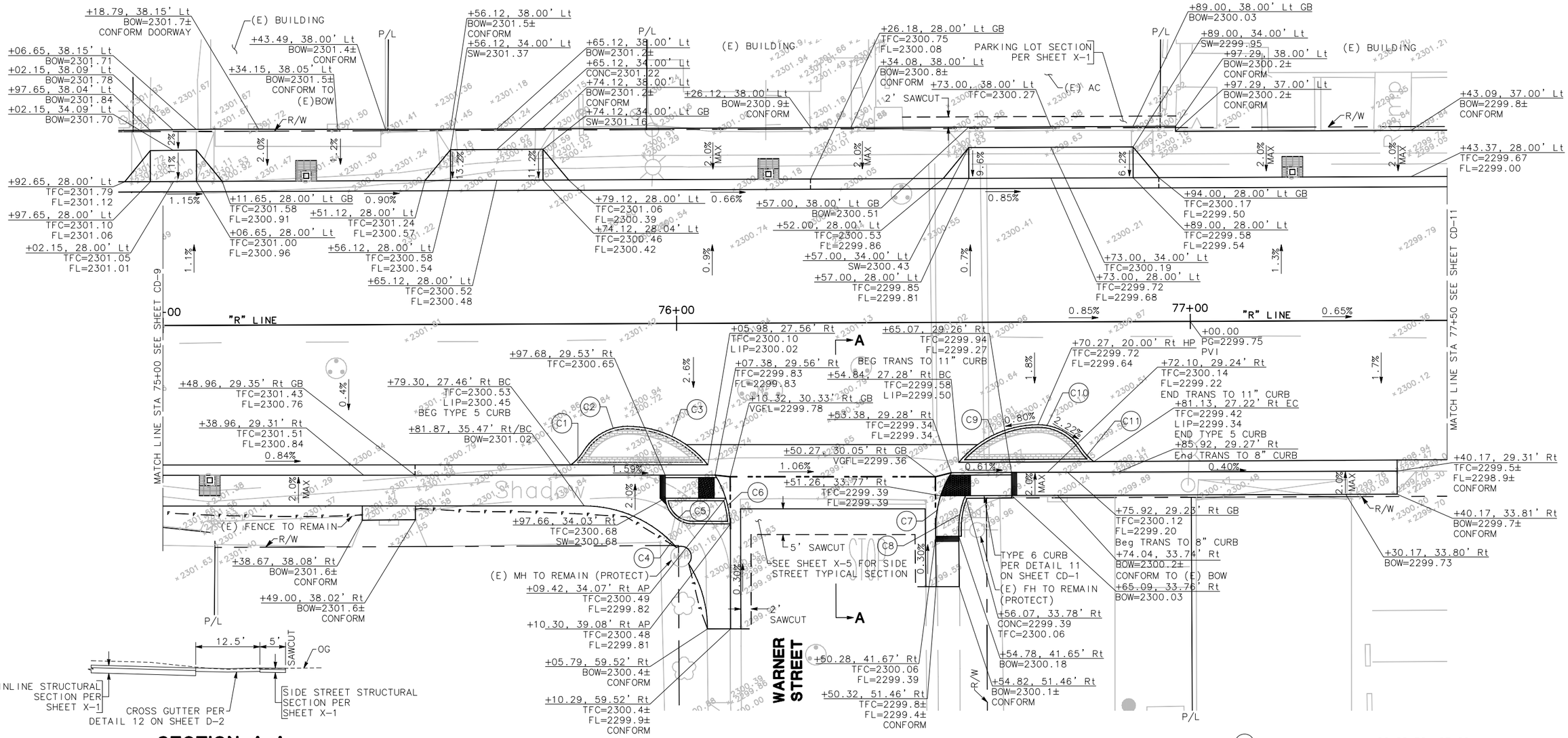

RIDGECREST BOULEVARD
STA 75+00 TO STA 77+50

SCALE: 1"=10'

SECTION A-A

NTS

CURVE ⓧ	BC	EC	R	△	T	L
C1	+79.30, 27.46'Rt	+18.82, 24.72'Rt	10.00'	21°28'00"	1.90'	3.75'
C2	+81.82, 24.72'Rt	+90.32, 20.00'Rt	10.00'	58°07'25"	5.56'	10.14'
C3	+90.32, 20.00'Rt	+05.98, 27.56'Rt	20.00'	51°32'10"	9.65'	17.99'
C4	+81.87, 35.47'Rt	+05.79, 59.51'Rt	24.00'	89°52'48"	23.95'	37.65'
C5	+99.67, 34.05'Rt	+05.07, 39.06'Rt	5.38'	86°31'26"	5.06'	8.12'
C6	+07.38, 29.56'Rt	+10.32, 40.03'Rt	20.00'	31°32'35"	5.65'	11.01'
C7	+50.27, 40.09'Rt	+53.39, 29.28'Rt	20.00'	32°39'49"	5.86'	11.40'
C8	+54.77, 40.07'Rt	+56.07, 33.78'Rt	15.50'	23°56'00"	3.29'	6.47'
C9	+54.84, 27.28'Rt	+70.27, 20.00'Rt	20.00'	50°30'16"	9.43'	17.63'
C10	+70.27, 20.00'Rt	+78.69, 24.60'Rt	10.00'	57°20'31"	5.47'	10.01'
C11	+78.69, 24.60'Rt	+81.13, 27.22'Rt	10.00'	20°36'00"	1.81'	3.60'
C12	+11.09, 5.00'Lt	+11.09, 5.00'Rt	5.00'	180°00'00"	INF	15.71'
C13	+11.72, 5.00'Lt	+13.72, 3.00'Lt	2.00'	90°00'00"	2.00'	3.14'
C14	+13.72, 0.50'Rt	+15.72, 2.50'Rt	2.00'	90°00'00"	2.00'	3.14'
C15	+22.47, 5.00'Rt	+22.47, 2.50'Rt	1.25'	180°00'00"	INF	3.93'
C16	+19.97, 2.50'Lt	+19.97, 5.00'Lt	1.25'	180°00'00"	INF	3.93'
C17	+27.00, 2.48'Lt	+28.72, 0.50'Lt	2.00'	81°54'31"	1.74'	2.86'
C18	+28.72, 3.00'Rt	+30.72, 5.00'Rt	2.00'	90°00'00"	2.00'	3.14'
C19	+31.22, 5.00'Rt	+31.22, 5.00'Lt	5.00'	180°00'00"	INF	15.71'

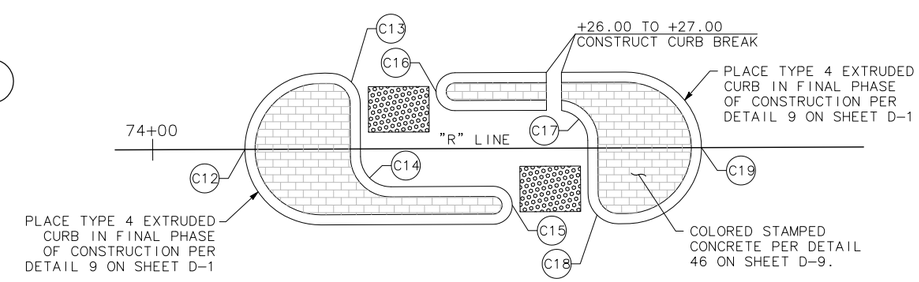

DETAIL A

SCALE: 1"=5'

SHELF-READY PLANS - NOT FOR CONSTRUCTION

Project No.						
ST0101	CITY OF RIDGECREST W. RIDGECREST BOULEVARD RECONSTRUCTION PROJECT CONSTRUCTION DETAILS	REGISTERED PROFESSIONAL ENGINEER EDGAR A. NORIEGA No. 61555 Exp. 6/30/13 CIVIL STATE OF CALIFORNIA	MARK THOMAS & COMPANY, INC. 7571 N REMINGTON AVENUE, SUITE 102 FRESNO, CALIFORNIA 93720 (559) 447-1938 FAX: (559) 447-8586 WWW.MARKTHOMAS.COM MTCO JOB NUMBER: FN-09105	DATE: 11/18/2011 SCALE: VARIES DRAWN BY: KS/MB/JL CK'D BY: GC DATE CK'D:	Revisions	Checked By	Date Checked	SHEET NO. 36 CD-10 OF 90 SHEETS

CAD USER: ksmith
PLOT DATE: Jan 31, 2012-03:18:09pm
FILE NAME: RCB_CD-7-CD-15
PATH: V:\Ridgecrest - FN-09105 - Ridgecrest Blvd\CADD\Drawing\

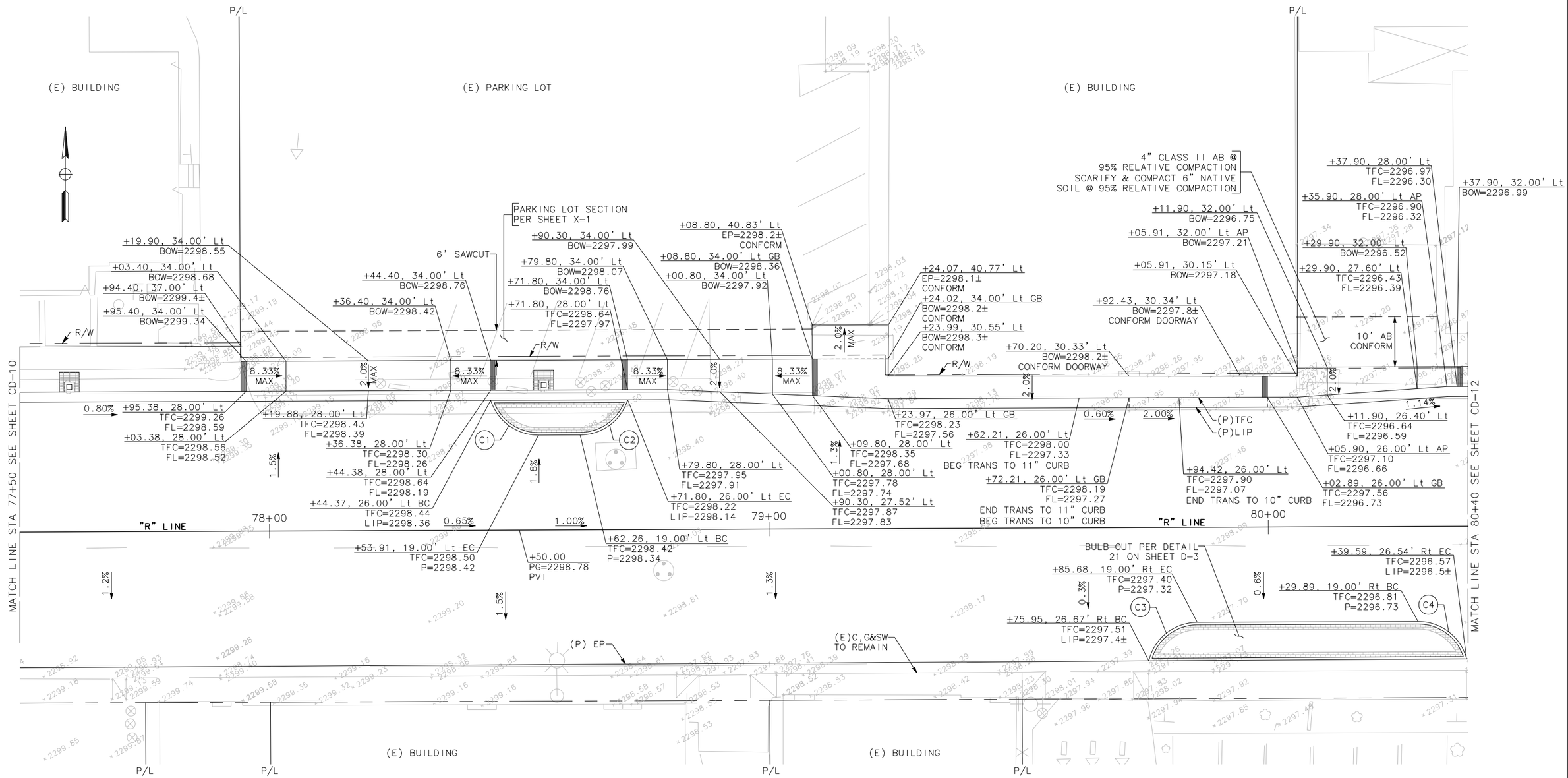

CURVE ⓧ	R	△	T	L
C1	10.00'	72°32'34"	7.34'	12.66'
C2	10.00'	72°32'34"	7.34'	12.66'
C3	10.00'	76°32'54"	7.89'	13.36'
C4	10.00'	75°47'03"	7.78'	13.23'

RIDGECREST BOULEVARD
STA 77+50 TO STA 80+40

SCALE: 1"=10'

V

SHELF-READY PLANS - NOT FOR CONSTRUCTION

Project No.	
ST0101	CITY OF RIDGECREST W. RIDGECREST BOULEVARD RECONSTRUCTION PROJECT CONSTRUCTION DETAILS

REGISTERED PROFESSIONAL ENGINEER — EDGAR A. NORIEGA — No. 61555 — Exp. 6/30/13 — CIVIL — STATE OF CALIFORNIA

MARK THOMAS & COMPANY, INC.
7571 N REMINGTON AVENUE, SUITE 102
FRESNO, CALIFORNIA 93720
(559) 447-1938 FAX: (559) 447-8586
WWW.MARKTHOMAS.COM
MTCO JOB NUMBER: FN-09105

DATE: 11/18/2011
SCALE: 1"= 10'
DRAWN BY: KS/MB/JL
CK'D BY: CG
DATE CK'D:

Revisions	Checked By	Date Checked

SHEET NO. 37

CD-11

OF 90 SHEETS

CAD USER: ksmith
PLOT DATE: Jan 31, 2012-03:18:11pm
FILE NAME: RCB_CD-7-CD-15
PATH: V:\Ridgecrest - FN-09105 - Ridgecrest Blvd\CADD\Drawing\

No.	LOCATION	DESC	ELEVATION
1	82+39.36, 54.32' Lt	CTFC	2294.9±
		CFL	2294.4±
2	82+44.18, 54.30' Lt	CBOW	2295.0±
3	82+40.42, 41.03' Lt	TFC	2294.75
		FL	2294.25
4	82+43.19. 34.31' Lt	TFC	2294.14
		FL	2294.14
5	82+45.90, 30.29' Lt	TFC	2294.74
		FL	2294.07
6	82+39.26, 28.54' Lt	VGFL	2294.14
7	82+47.76, 28.16' Lt	TFC	2294.69
		FL	2294.02
8	82+49.89, 26.16' Lt	TFC	2294.24
		LIP	2294.16
9	82+69.64, 19.00' Lt	TFC	2294.12
		P	2294.04
10	82+59.66, 28.16' Lt	TFC	2294.52
		FL	2293.85
11	82+62.14, 36.50' Lt	BOW	2294.48
12	82+53.18, 30.29' Lt	CONC	2294.56
		TFC	2294.56
13	82+53.19, 34.29' Lt	CONC	2294.48
14	82+69.69, 33.66' Lt	TFC	2294.49
		BOW	2293.82

No.	LOCATION	DESC	ELEVATION
15	82+73.69, 33.66' Lt	TFC	2294.43
		BOW	2293.76
16	82+69.66, 26.16' Lt	TFC	2293.89
		LIP	2293.81
17	82+73.66, 26.16' Lt	TFC	2293.84
		LIP	2293.76
18	82+73.64, 19.00' Lt GB	TFC	2294.08
		P	2294.00
19	82+81.67, 28.16' Lt	TFC	2294.21
		FL	2293.54
20	82+81.69, 34.16' Lt	CBOW	2294.33
21	82+89.76, 28.16' Lt	CTFC	2294.1±
		CFL	2293.4±
22	82+89.76, 34.18' Lt	CBOW	2294.3±
23	82+62.50, 28.09' Rt	TFC	2294.7±
		FL	2294.1±
24	82+62.50, 38.59' Rt	CBOW	2294.8±
25	82+79.59, 20.00' Rt	TFC	2294.07
		P	2293.99
26	82+79.59, 26.11' Rt	TFC	2294.01
		LIP	2293.93
27	82+85.90, 39.26' Rt	CBOW	2294.9±
28	82+83.59, 20.00' Rt	TFC	2294.02
		P	2293.94

No.	LOCATION	DESC	ELEVATION
29	82+83.59, 26.12' Rt	TFC	2293.95
		LIP	2293.87
30	83+00.50, 28.15' Rt	CTFC	2294.2±
		CFL	2293.5±
31	83+00.50, 38.65' Rt	CBOW	2294.5±
32	82+62.50, 34.14' Rt	CBOW	2295.0±
33	82+94.57, 28.14' Rt GB	TFC	2294.33
		FL	2293.66
34	82+94.57, 33.64' Rt	CONC	2294.44
35	82+83.57, 33.12' Rt	TFC	2294.79
		BOW	2293.87
36	82+79.57, 33.11' Rt	TFC	2294.85
		BOW	2293.93
37	82+64.37, 34.16' Lt	TFC	2294.48
		BOW	2294.23
38	82+70.07, 28.10' Rt	TFC	2294.63
		FL	2293.96
39	82+70.07, 33.60' Rt	BOW	2294.65
40	82+69.66, 28.16' Lt	TFC	2293.71
		FL	2293.71
41	82+73.66, 28.16' Lt	TFC	2293.65
		FL	2293.65

CURVE ⓧ	BC	EC	R	△	T	L
C1	+59.56, 26.00' Lt	+61.56, 24.00' Lt	10.00'	16°15'37"	1.43'	2.84'
C2	+61.56, 24.00' Lt	+65.13, 21.03' Lt	10.00'	26°50'27"	2.39'	4.68'
C3	+65.13, 21.03' Lt	+90.16, 26.00' Lt	26.00'	58°46'11"	14.64'	26.67'
C4	+79.46, 36.00' Lt	+88.96, 45.46' Lt	9.50'	89°45'00"	9.46'	14.88'
C5	+92.24, 28.00' Lt	+99.23, 45.60' Lt	26.00'	42°42'28"	10.17'	19.38'
C6	+39.34, 49.12' Lt	+47.76, 28.16' Lt	30.00'	44°13'57"	12.19'	23.16'
C7	+49.89, 26.16' Lt	+69.64, 19.00' Lt	30.00'	40°24'53"	11.04'	21.16'
C8	+00.84, 26.26' Rt	+10.46, 19.00' Rt	10.00'	74°05'57"	7.55'	12.93'
C9	+18.66, 19.00' Rt	+28.17, 26.18' Rt	10.00'	73°39'34"	7.49'	12.85'
C10	+68.51, 26.10' Rt	+70.56, 24.04' Rt	10.00'	16°39'46"	1.46'	2.91'
C11	+70.56, 24.04' Rt	+78.59, 20.00' Rt	10.00'	53°26'14"	5.03'	9.33'
C12	+84.59, 20.00' Rt	+92.64, 24.07' Rt	10.00'	53°39'48"	5.06'	9.37'
C13	+92.64, 24.07' Rt	+94.69, 26.14' Rt	10.00'	16°41'54"	1.47'	2.91'

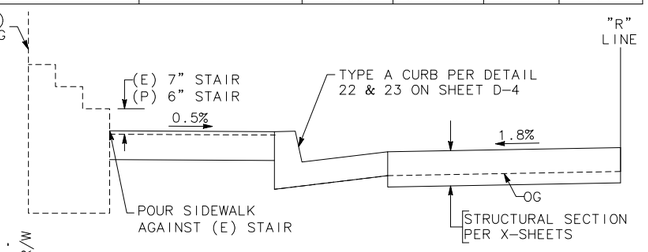

SECTION A-A
NTS

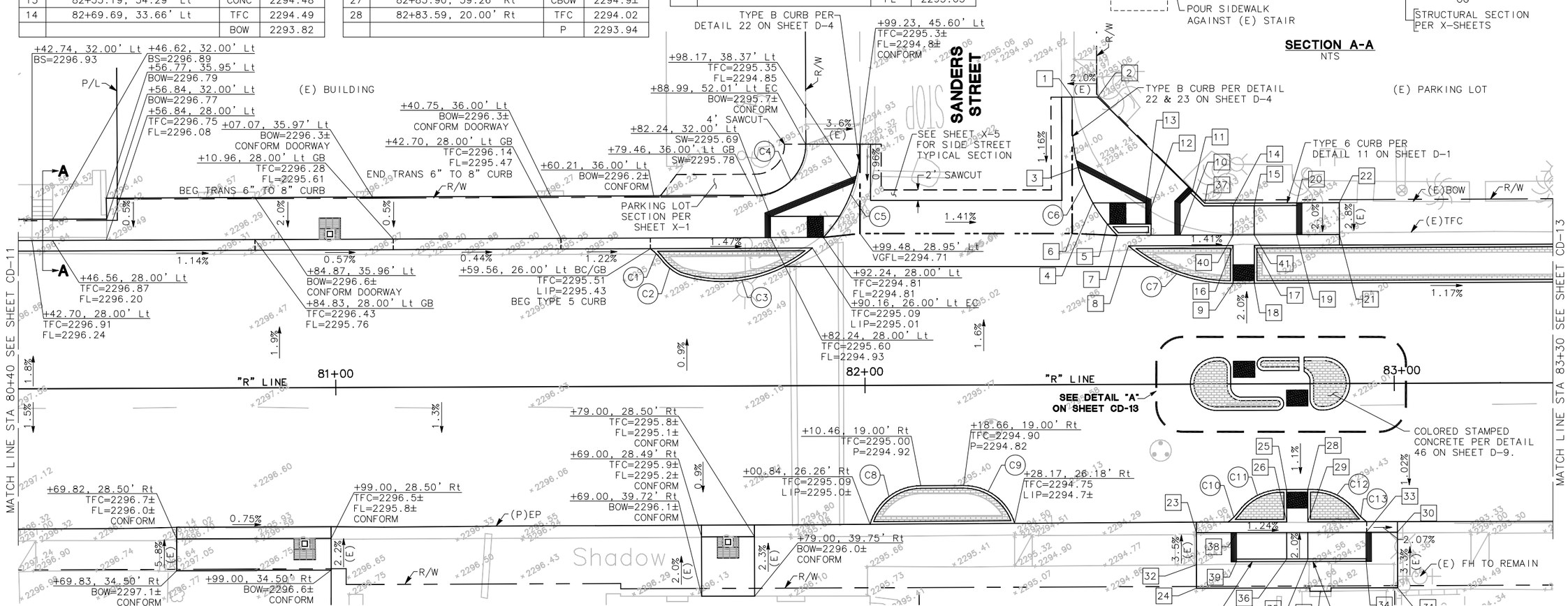

RIDGECREST BOULEVARD
STA 80+40 TO STA 83+25

SCALE: 1"=10'

W

SHELF-READY PLANS - NOT FOR CONSTRUCTION

Project No.			
ST0101	CITY OF RIDGECREST W. RIDGECREST BOULEVARD RECONSTRUCTION PROJECT CONSTRUCTION DETAILS	REGISTERED PROFESSIONAL ENGINEER EDGAR A. NORIEGA No. 61555 Exp. 6/30/13 CIVIL STATE OF CALIFORNIA	MARK THOMAS & COMPANY, INC. 7571 N REMINGTON AVENUE, SUITE 102 FRESNO, CALIFORNIA 93720 (559) 447-1938 FAX: (559) 447-8586 WWW.MARKTHOMAS.COM MTCO JOB NUMBER: FN-09105

DATE: 11/18/2011	Revisions	Checked By	Date Checked
SCALE: VARIES			
DRAWN BY: KS/MB/JL			
CK'D BY: CC			
DATE CK'D:			

SHEET NO. 38

CD-12

OF 90 SHEETS

CAD USER: ksmith
PLOT DATE: Jan 31, 2012-03:18:16pm
FILE NAME: RCB_CD-7-CD-15
PATH: V:\Ridgecrest - FN-09105 - Ridgecrest Blvd\CADD\Drawing\

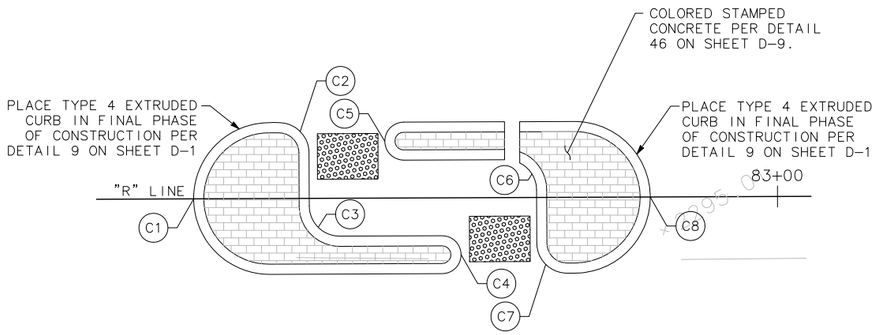

DETAIL A

SCALE: 1"=5'

CURVE (X)	BC	EC	R	△	T	L
C1	+66.48, 5.00' Rt	+66.48, 5.00' Lt	5.00'	180°00'00"	INF	15.71'
C2	+67.10, 5.00' Lt	+69.10, 3.00' Lt	2.00'	90°00'00"	2.00'	3.14'
C3	+69.10, 0.50' Rt	+71.10, 2.50' Rt	2.00'	90°00'00"	2.00'	3.14'
C4	+77.85, 2.50' Rt	+77.85, 5.00' Rt	1.25'	180°00'00"	INF	3.93'
C5	+75.35, 2.50' Lt	+75.35, 5.00' Lt	1.25'	180°00'00"	INF	3.93'
C6	+84.10, 0.50' Lt	+83.00, 2.29' Lt	2.00'	63°19'47"	1.23'	2.21'
C7	+86.10, 5.00' Rt	+84.10, 3.00' Rt	2.00'	90°00'00"	2.00'	3.14'
C8	+86.60, 5.00' Lt	+86.60, 5.00' Rt	5.00'	180°00'00"	INF	15.71'
C9	+43.72, 19.09' Lt	+53.18, 26.39' Lt	10.00'	73°44'59"	7.50'	12.87'
C10	+45.90, 26.13' Rt	+55.51, 18.79' Rt	10.00'	74°00'16"	7.53'	12.91'
C11	+60.83, 18.73' Rt	+70.44, 25.87' Rt	10.00'	74°15'49"	7.57'	12.96'
C12	+70.47, 27.87' Rt	+85.55, 29.56' Rt	57.00'	15°08'57"	7.58'	15.07'
C13	+85.55, 29.56' Rt	+00.64, 31.18' Rt	57.00'	15°08'57"	7.58'	15.07'
C14	+43.99, 28.85' Lt	+53.84, 20.95' Lt	10.00'	78°45'04"	8.21'	13.75'
C15	+71.18, 21.27' Lt	+74.80, 21.32' Lt	2.50'	91°50'41"	2.58'	4.01'
C16	+80.02, 21.39' Rt	+90.00, 31.00' Lt	10.00'	72°06'42"	7.28'	12.59'

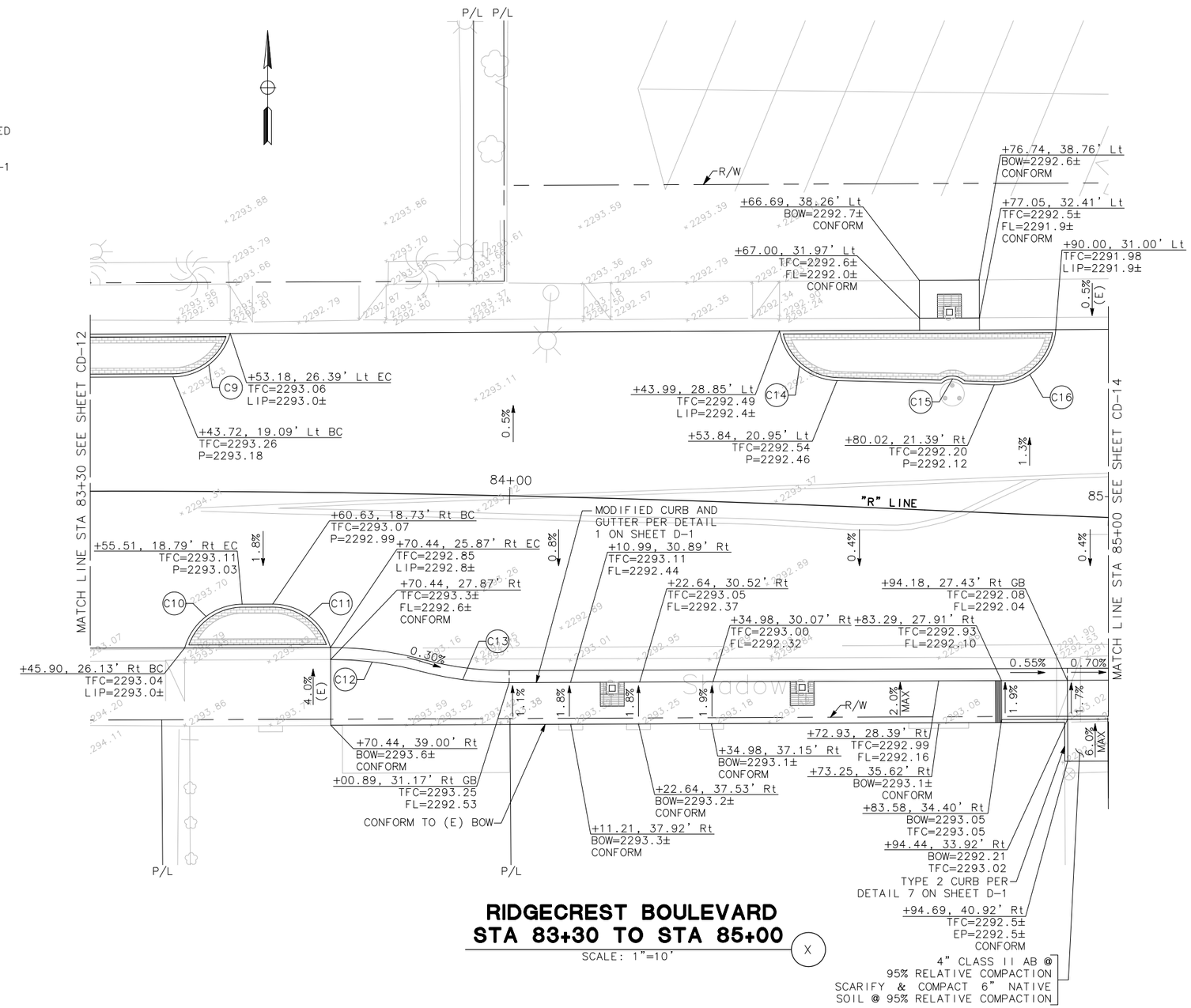

RIDGECREST BOULEVARD STA 83+30 TO STA 85+00 (X)

SCALE: 1"=10'

SHELF-READY PLANS - NOT FOR CONSTRUCTION

Project No.						
ST0101	CITY OF RIDGECREST W. RIDGECREST BOULEVARD RECONSTRUCTION PROJECT CONSTRUCTION DETAILS	REGISTERED PROFESSIONAL ENGINEER EDGAR A. NORIEGA No. 61555 Exp. 6/30/13 CIVIL STATE OF CALIFORNIA	MARK THOMAS & COMPANY, INC. 7571 N REMINGTON AVENUE, SUITE 102 FRESNO, CALIFORNIA 93720 (559) 447-1938 FAX: (559) 447-8586 WWW.MARKTHOMAS.COM MTCO JOB NUMBER: FN-09105	DATE: 11/18/2011 SCALE: 1"= 10' DRAWN BY: KS/MB/JL CK'D BY: CG DATE CK'D:	Revisions	Checked By	Date Checked	SHEET NO. 39 CD-13 OF 90 SHEETS

PATH: V:\Ridgecrest - FN-09105 - Ridgecrest Blvd\CADD\Drawing\ FILE NAME: RCB_CD-7-CD-15 PLOT DATE: Jan 31, 2012-03:18:19pm CAD USER: ksmith

No.	LOCATION	DESC	ELEVATION
1	85+04.75, 33.60' Lt	CTFC	2292.3±
		CFL	2291.6±
2	85+04.54, 39.83' Lt	CBOW	2292.3±
3	85+08.22, 39.98' Lt	CBOW	2292.2±
4	85+31.79, 39.31' Lt	TFC	2291.93
		FL	2291.26
5	85+30.67, 50.32' Lt	CONC	2291.89
6	85+33.09, 53.54' Lt	CONC	2291.87
7	85+43.64, 55.11' Lt	TFC	2291.71
		FL	2291.04
8	85+27.85, 60.76' Lt	CBOW	2292.0±
9	85+27.28, 84.42' Lt	CBOW	2292.0±
10	85+44.46, 84.81' Lt	CTFC	2291.4±
		CFL	2290.7±
11	85+38.17, 42.09' Lt	TFC	2291.38
		LIP	2291.30
12	85+41.79, 46.61' Lt	TFC	2291.38
		LIP	2291.30
13	85+58.85, 42.73' Lt	TFC	2291.51
		CONC	2291.43
14	85+60.82, 47.22' Lt	TFC	2291.41
		CONC	2291.33
15	85+66.75, 42.92' Lt	CP	2291.43
16	85+62.08, 91.65' Lt	TFC	2291.12
		P	2291.04
17	86+01.30, 43.48' Lt	CP	2291.11
18	86+11.17, 47.96' Lt	TFC	2291.06
		P	2290.98
19	86+15.07, 43.60' Lt	TFC	2291.11
		P	2291.03
20	86+24.12, 43.46' Lt	TFC	2291.01
		LIP	2290.93
21	86+21.80, 47.96' Lt	TFC	2290.99
		LIP	2290.91
22	86+30.75, 39.34' Lt HP	TFC	2291.52
		FL	2290.85
23	86+39.23, 43.48' Lt	CBOW	2291.6±
24	86+31.72, 48.19' Lt	CONC	2291.40
25	86+30.02, 51.81' Lt	CONC	2291.34
26	86+22.54, 56.29' Lt	TFC	2291.27
		FL	2290.77
27	86+39.25, 89.79' Lt	CBOW	2291.3±
28	86+22.68, 89.80' Lt	CTFC	2291.1±
		CFL	2290.6±
29	86+05.35, 65.65' Lt HP	TFC	2291.20
		FL	2291.12

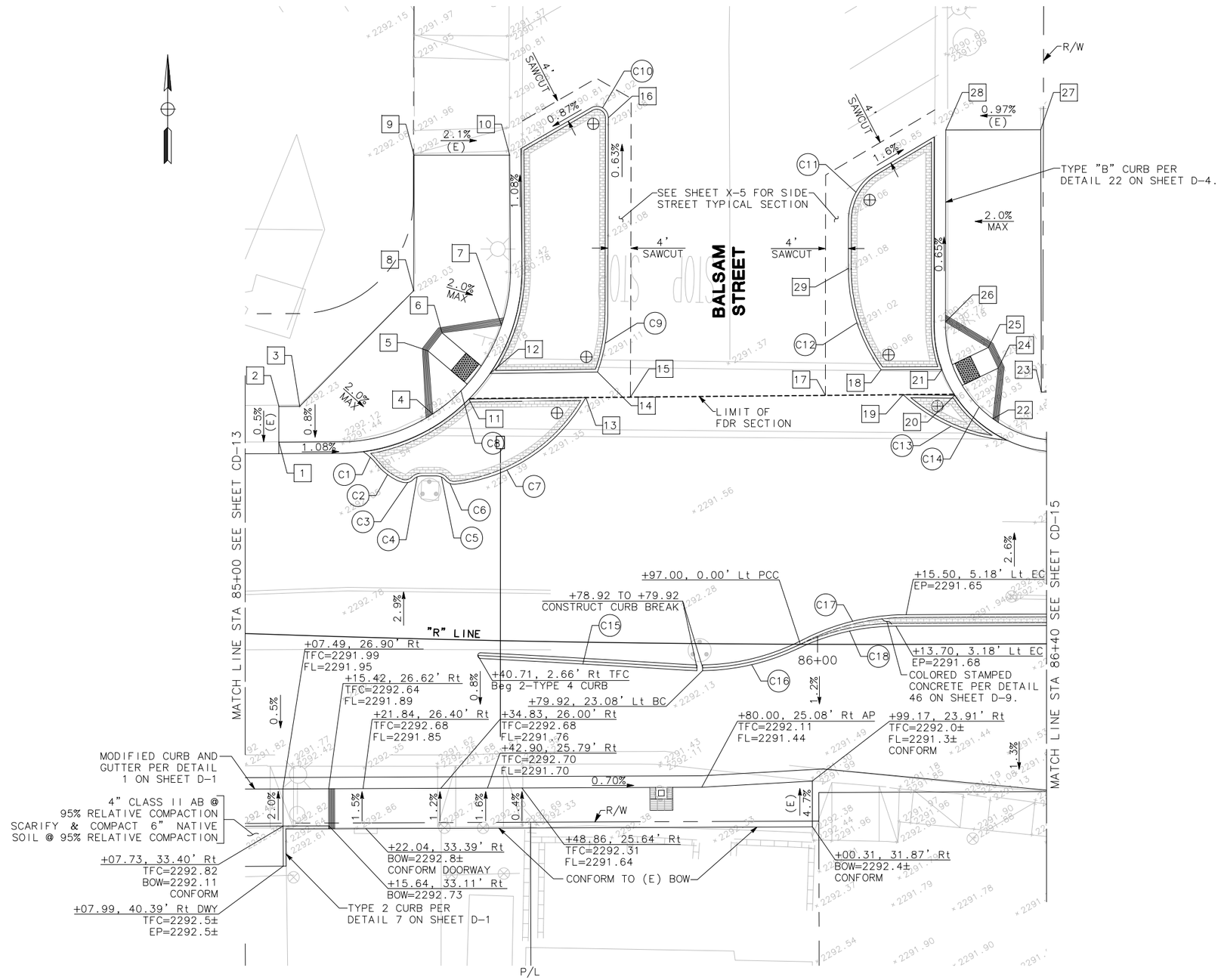

RIDGECREST BOULEVARD
STA 85+00 TO STA 86+40 (Y)

SCALE: 1"=10'

CURVE (X)	BC	EC	R	△	T	L
C1	+19.72, 32.40' Lt	+22.07, 30.36' Lt	1.00'	17°46'28"	0.16'	0.31'
C2	+22.07, 30.36' Lt	+26.57, 27.30' Lt	1.00'	31°21'40"	0.28'	0.55'
C3	+26.57, 27.30' Lt	+28.69, 27.82' Lt	0.20'	65°31'40"	0.13'	0.23'
C4	+28.69, 27.82' Lt	+30.10, 28.45' Lt	0.20'	44°55'42"	0.08'	0.16'
C5	+32.74, 28.52' Lt	+34.32, 27.83' Lt	0.20'	50°42'28"	0.09'	0.18'
C6	+34.32, 27.83' Lt	+36.13, 27.15' Lt	0.20'	57°17'45"	0.11'	0.20'
C7	+36.13, 27.15' Lt	+52.89, 35.08' Lt	3.00'	35°41'48"	0.97'	1.87'
C8	+15.45, 33.95' Lt	+45.04, 64.96' Lt	3.00'	90°12'43"	3.01'	4.72'
C9	+60.82, 47.22' Lt	+62.52, 57.38' Lt	3.00'	19°44'49"	0.52'	1.03'
C10	+62.08, 91.65' Lt	+58.96, 93.34' Lt	0.20'	120°03'56"	0.35'	0.42'
C11	+05.37, 74.04' Lt	+10.38, 82.60' Lt	1.00'	59°01'48"	0.57'	1.03'
C12	+11.17, 47.96' Lt	+05.35, 65.65' Lt	3.00'	36°05'24"	0.98'	1.89'
C13	+33.09, 35.69' Lt	+15.07, 43.60' Lt	3.00'	38°28'25"	1.05'	2.01'
C14	+42.54, 35.50' Lt	+22.54, 55.58' Lt	2.00'	90°13'49"	2.01'	3.15'
C15	+41.19, 03.17' Lt	+76.95, 04.66' Lt	300.00'	0°41'04"	1.79'	3.58'
C16	+79.92, 23.08' Lt	+96.65, 00.72' Rt	4.00'	24°45'33"	0.88'	1.73'
C17	+97.31, 00.73' Lt	+15.50, 05.18' Lt	4.00'	27°03'00"	0.96'	1.89'
C18	+96.65, 00.72' Rt	+13.70, 03.18' Lt	4.00'	25°14'49"	0.90'	1.76'

SHELF-READY PLANS - NOT FOR CONSTRUCTION

Project No.			
ST0101	CITY OF RIDGECREST W. RIDGECREST BOULEVARD RECONSTRUCTION PROJECT CONSTRUCTION DETAILS	REGISTERED PROFESSIONAL ENGINEER EDGAR A. NORIEGA No. 61555 Exp. 6/30/13 CIVIL STATE OF CALIFORNIA	MARK THOMAS & COMPANY, INC. 7571 N REMINGTON AVENUE, SUITE 102 FRESNO, CALIFORNIA 93720 (559) 447-1938 FAX: (559) 447-8586 WWW.MARKTHOMAS.COM MTCO JOB NUMBER: FN-09105

DATE: 11/18/2011	Revisions	Checked By	Date Checked
SCALE: 1"= 10'			
DRAWN BY: KS/MB/JL			
CK'D BY: CG			
DATE CK'D:			

SHEET NO. 40

CD-14

OF 90 SHEETS

CAD USER: ksmith
PLOT DATE: Jan 31, 2012-03:18:21pm
FILE NAME: RCB_CD-7-CD-15
PATH: V:\Ridgecrest - FN-09105 - Ridgecrest Blvd\CADD\Drawing\

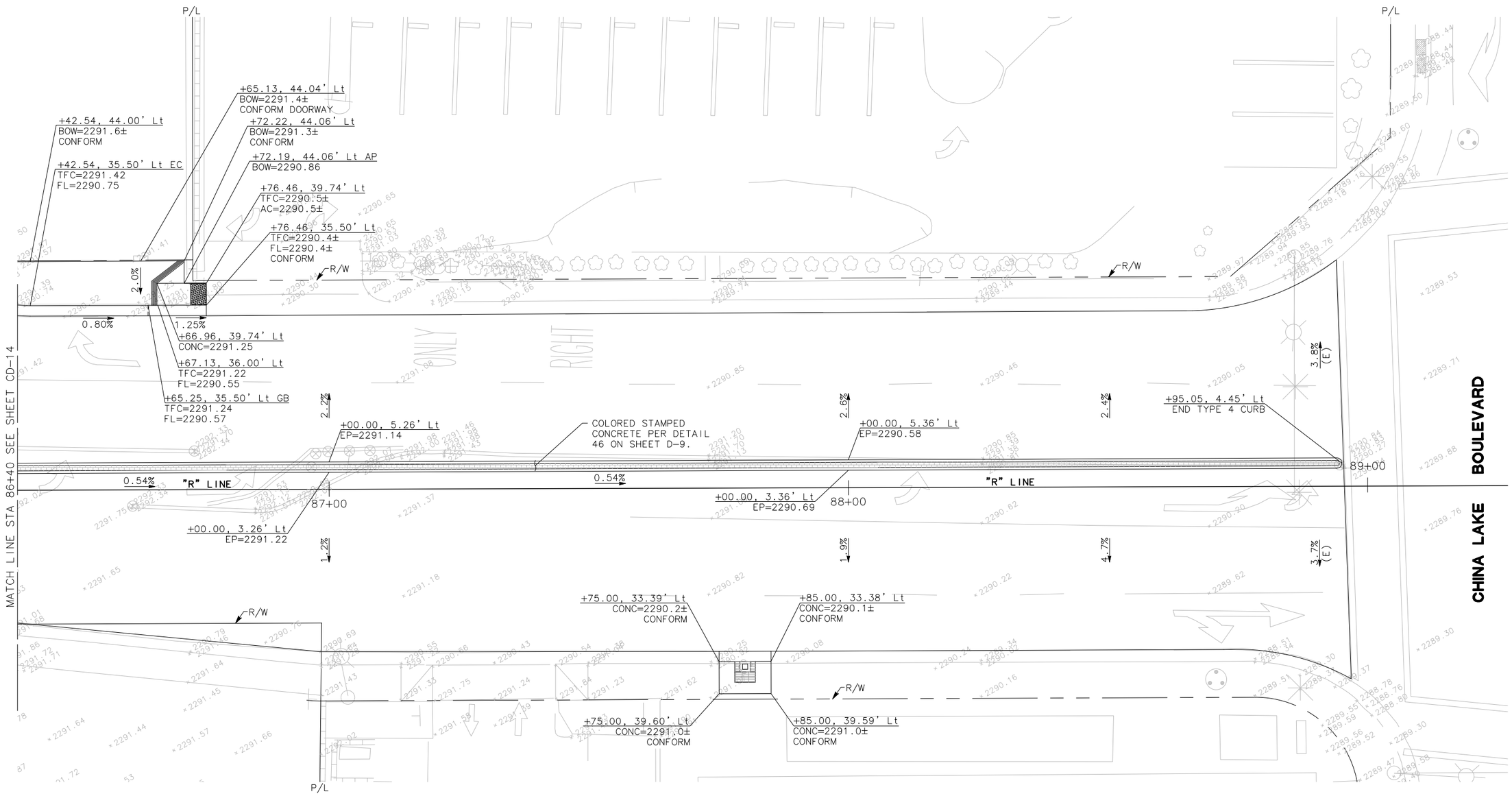

RIDGECREST BOULEVARD
STA 86+40 TO STA 98+50

SCALE: 1"=10'

Z

SHELF-READY PLANS - NOT FOR CONSTRUCTION

Project No.							
ST0101	CITY OF RIDGECREST W. RIDGECREST BOULEVARD RECONSTRUCTION PROJECT CONSTRUCTION DETAILS	REGISTERED PROFESSIONAL ENGINEER EDGAR A. NORIEGA No. 61555 Exp. 6/30/13 CIVIL STATE OF CALIFORNIA	MARK THOMAS & COMPANY, INC. 7571 N REMINGTON AVENUE, SUITE 102 FRESNO, CALIFORNIA 93720 (559) 447-1938 FAX: (559) 447-8586 WWW.MARKTHOMAS.COM MTCO JOB NUMBER: FN-09105	DATE: 11/18/2011 SCALE: 1"= 10' DRAWN BY: KS/MB/JL CK'D BY: CG DATE CK'D:	Revisions	Checked By	Date Checked	SHEET NO. 41 CD-15 OF 90 SHEETS

CAD USER: ksmith
PLOT DATE: Jan 31, 2012-03:18:23pm
FILE NAME: RCB_CD-7-CD-15
PATH: V:\Ridgecrest - FN-09105 - Ridgecrest Blvd\CADD\Drawing\

UTILITY NOTES

1. THE CONTRACTOR SHALL BE RESPONSIBLE FOR CONTACTING THE RESPECTIVE UTILITY COMPANIES FOR VERIFICATION AT THE SITE OF ANY POSSIBLE CONFLICTS WITH THEIR UNDERGROUND UTILITIES AND THE PROPOSED IMPROVEMENTS SHOWN ON THESE PLANS.
2. THE CONTRACTOR SHALL BE RESPONSIBLE FOR CONTACTING THE RESPECTIVE UTILITY COMPANIES 48 HOURS PRIOR TO WORKING AROUND ANY POSSIBLE CONFLICTS WITH THEIR UNDERGROUND UTILITIES AND THE PROPOSED IMPROVEMENTS SHOWN ON THESE PLANS.
3. THE TYPES, LOCATIONS, SIZES AND DEPTHS OF EXISTING UNDERGROUND UTILITIES SHOWN ON THESE PLANS WERE OBTAINED FROM SOURCES VARYING RELIABILITY. THE CONTRACTOR IS CAUTIONED THAT ONLY ACTUAL EXCAVATION WILL REVEAL THE TYPES, EXTENT, SIZES, LOCATIONS, AND DEPTHS OF SUCH UNDERGROUND UTILITIES. THE CITY OF RIDGECREST NOR ITS CONSULTANT, MARK THOMAS & CO. INC., CAN ASSUME THE RESPONSIBILITY FOR THE COMPLETENESS OR ACCURACY OF THE DELINEATION OF SUCH UTILITIES NOR THE EXISTENCE OF OTHER BURIED OBJECTS OF SUCH UNDERGROUND UTILITIES, WHICH MAY BE ENCOUNTERED BUT WHICH ARE NOT SHOWN ON THESE PLANS.
4. PER INDIAN WELLS WATER DISTRICT STANDARD, ALL WATER MAINS SHALL BE ASSUMED 36" BELOW EXISTING GRADE. ALL WATER LATERALS SHALL BE ASSUMED 24" BELOW EXISTING GRADE. AT NO TIME SHALL THE FINISHED GRADE PROVIDE LESS THAN 30" OF COVER OVER WATER MAINS.

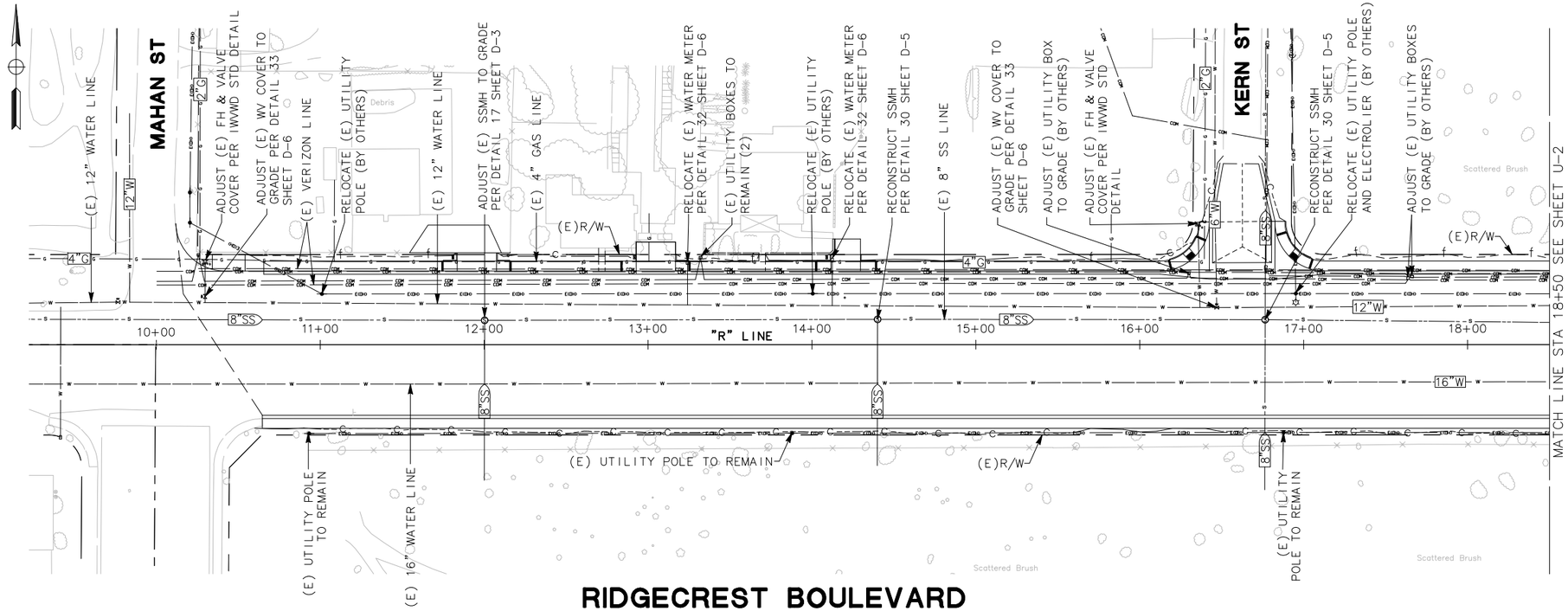

RIDGECREST BOULEVARD
PLAN
SCALE: 1"= 40'

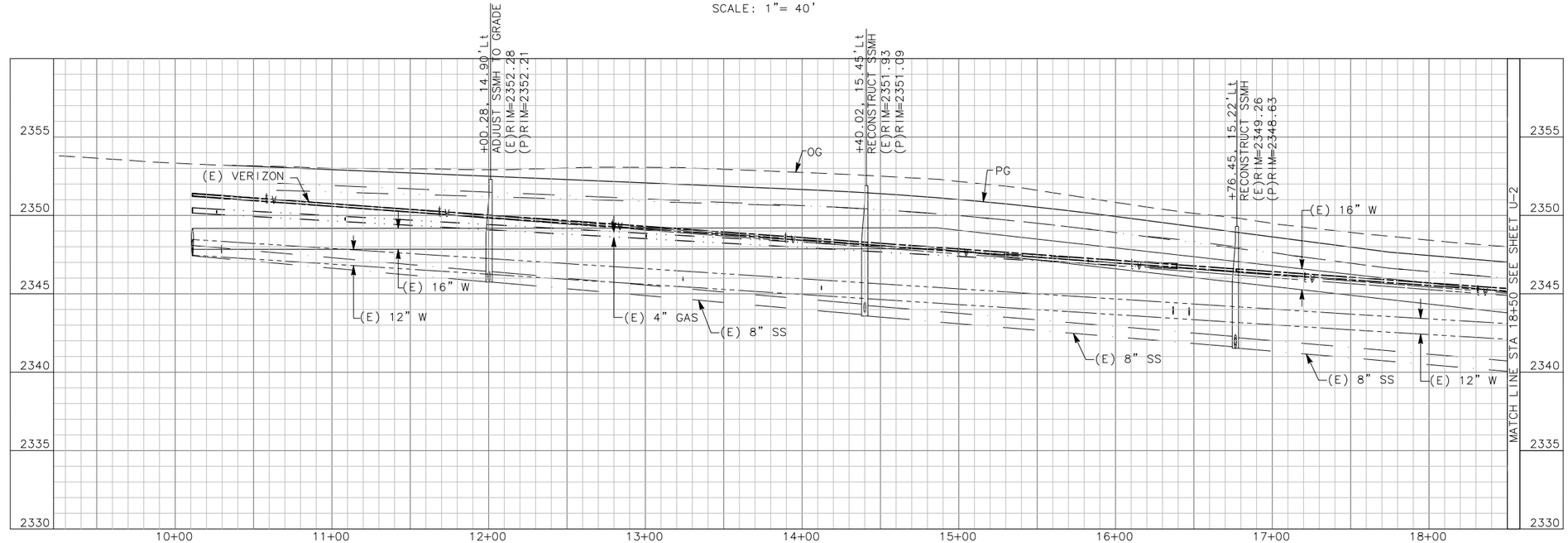

PROFILE
SCALE H: 1"= 40'
V: 1"= 4'

SHELF-READY PLANS - NOT FOR CONSTRUCTION

Project No.							
ST0101	CITY OF RIDGECREST W. RIDGECREST BOULEVARD RECONSTRUCTION PROJECT UTILITIES	REGISTERED PROFESSIONAL ENGINEER EDGAR A. NORIEGA No. 61555 Exp. 6/30/13 CIVIL STATE OF CALIFORNIA	MARK THOMAS & COMPANY, INC. 7571 N REMINGTON AVENUE, SUITE 102 FRESNO, CALIFORNIA 93720 (559) 447-1938 FAX: (559) 447-8586 WWW.MARKTHOMAS.COM MTCO JOB NUMBER: FN-09105	DATE: 11/18/2011 SCALE: DRAWN BY: KS/MB/JL CK'D BY: CG DATE CK'D:	Revisions	Checked By	Date Checked	SHEET NO. 42 U-1 OF 90 SHEETS

CAD USER: ksmith
PLOT DATE: Jan 31, 2012-03:18:30pm
FILE NAME: RCB_U-1-U-7
PATH: V:\Ridgecrest - FN-09105 - Ridgecrest Blvd\CADD\Drawing\

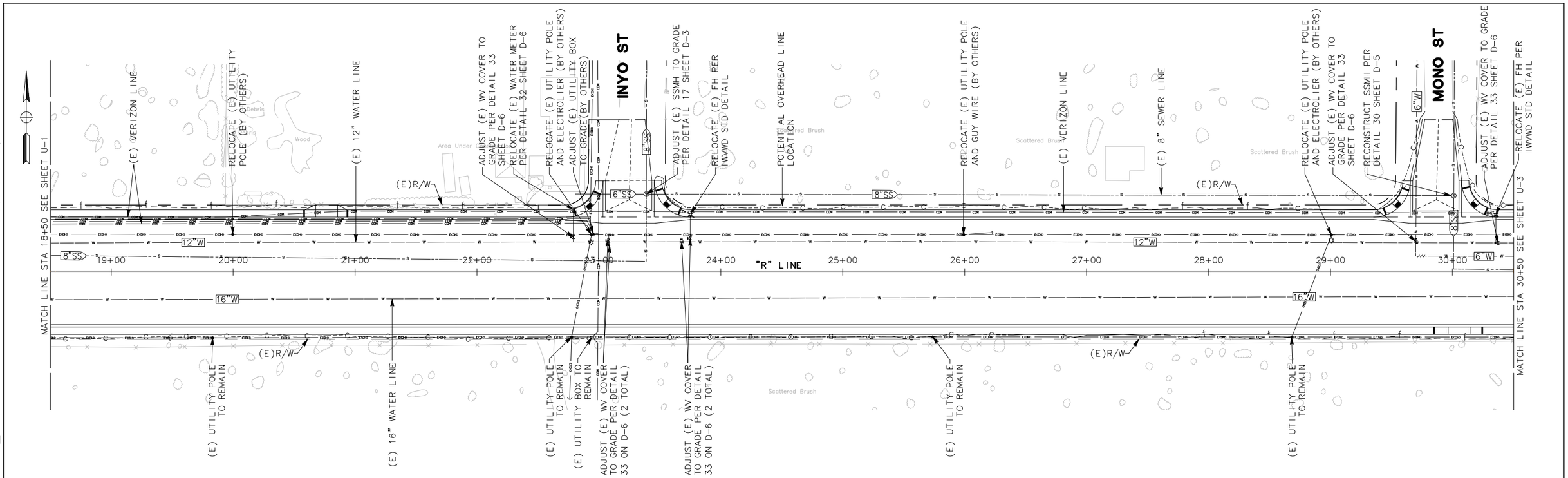

RIDGECREST BOULEVARD

PLAN

SCALE: 1"= 40'

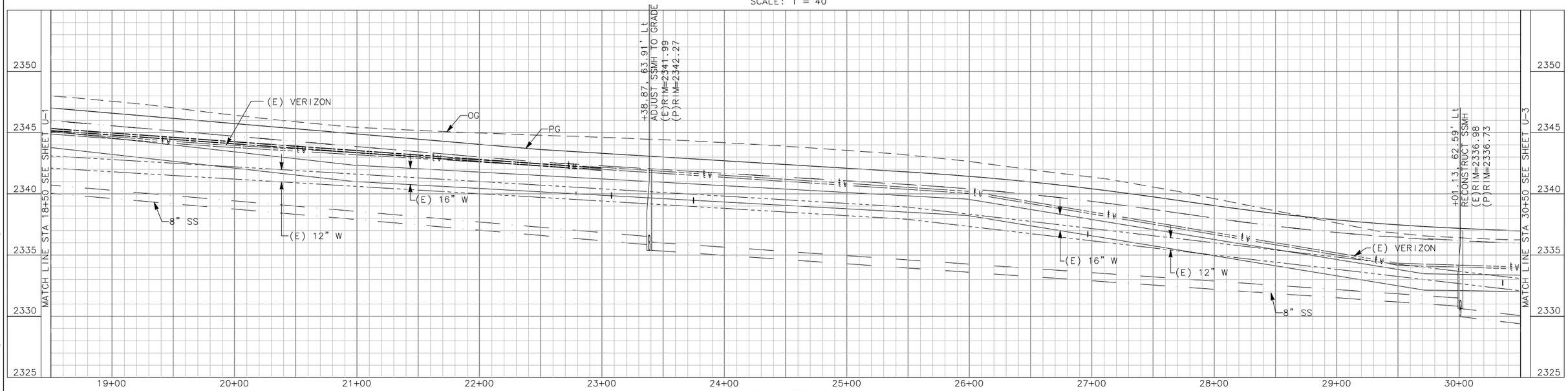

PROFILE

SCALE H: 1"= 40'
V: 1"= 4'

SHELF-READY PLANS - NOT FOR CONSTRUCTION

Project No.							
ST0101	CITY OF RIDGECREST W. RIDGECREST BOULEVARD RECONSTRUCTION PROJECT UTILITIES	RECORDED PROFESSIONAL ENGINEER EDGAR A. NORIEGA No. 61555 Exp. 6/30/13 CIVIL STATE OF CALIFORNIA	MARK THOMAS & COMPANY, INC. 7571 N REMINGTON AVENUE, SUITE 102 FRESNO, CALIFORNIA 93720 (559) 447-1938 FAX: (559) 447-8586 WWW.MARKTHOMAS.COM MTCO JOB NUMBER: FN-09105	DATE: 11/18/2011 SCALE: DRAWN BY: KS/MB/JL CK'D BY: CC DATE CK'D:	Revisions	Checked By	Date Checked	SHEET NO. 43 U-2 OF 90 SHEETS

FILE NAME: RCB_U-1-U-7
PLOT DATE: Jan 31, 2012-03:18:33pm
CAD USER: ksmith
PATH: V:\Ridgecrest - FN-09105 - Ridgecrest Blvd\CADD\Drawing\

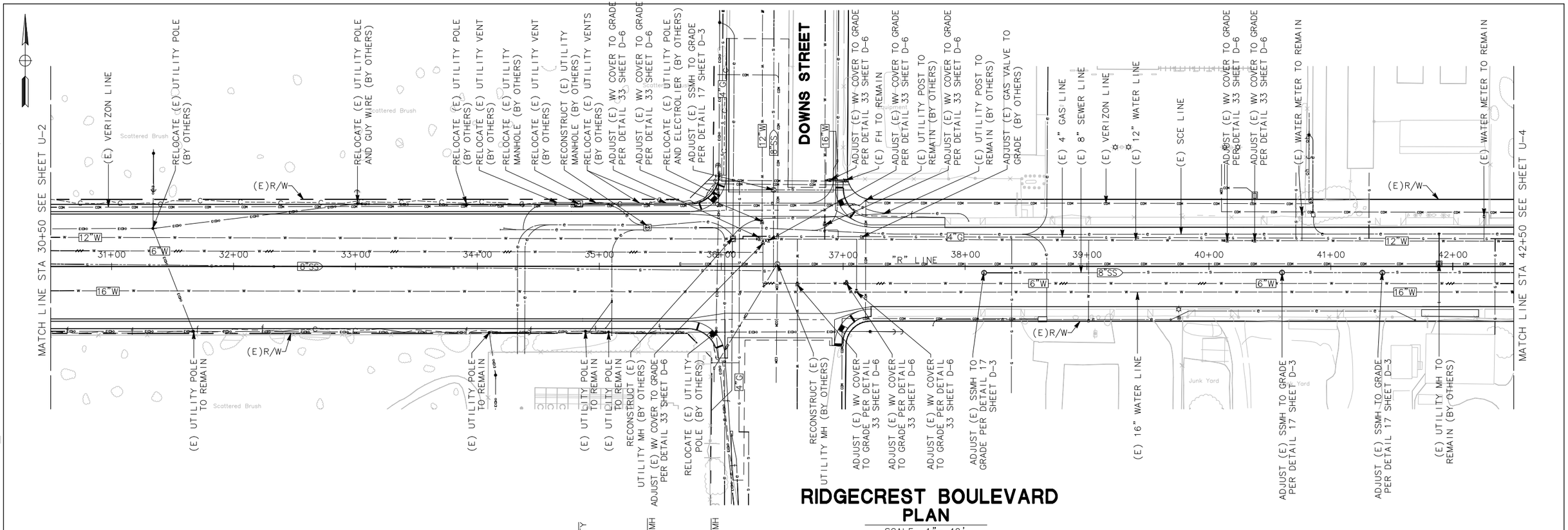

RIDGECREST BOULEVARD
PLAN
SCALE: 1"= 40'

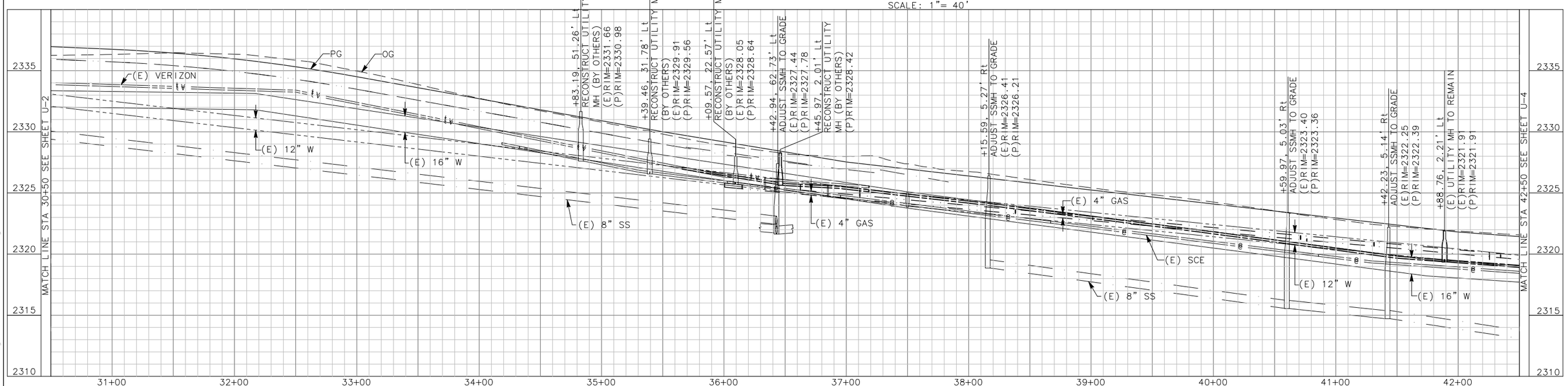

PROFILE
SCALE H: 1"= 40'
V: 1"= 4'

SHELF-READY PLANS - NOT FOR CONSTRUCTION

Project No.							
ST0101	CITY OF RIDGECREST W. RIDGECREST BOULEVARD RECONSTRUCTION PROJECT UTILITIES	RECORDED PROFESSIONAL ENGINEER EDGAR A. NORIEGA No. 61555 Exp. 6/30/13 CIVIL STATE OF CALIFORNIA	MARK THOMAS & COMPANY, INC. 7571 N REMINGTON AVENUE, SUITE 102 FRESNO, CALIFORNIA 93720 (559) 447-1938 FAX: (559) 447-8586 WWW.MARKTHOMAS.COM MTCO JOB NUMBER: FN-09105	DATE: 11/18/2011 SCALE: DRAWN BY: KS/MB/JL CK'D BY: CC DATE CK'D:	Revisions	Checked By	Date Checked	SHEET NO. 44 U-3 OF 90 SHEETS

PATH: V:\Ridgecrest - FN-09105 - Ridgecrest Blvd\CADD\Drawing\ FILE NAME: RCB_U-1-U-7 PLOT DATE: Jan 31, 2012-03:18:35pm CAD USER: ksmith

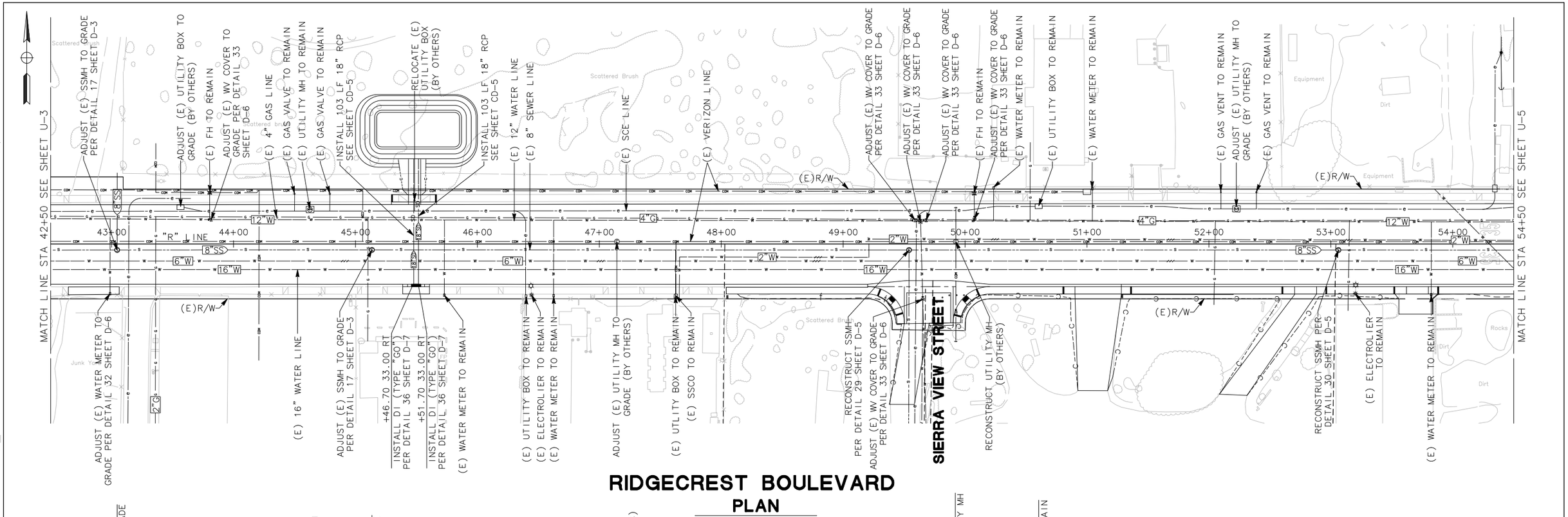

RIDGECREST BOULEVARD

PLAN

SCALE: 1"= 40'

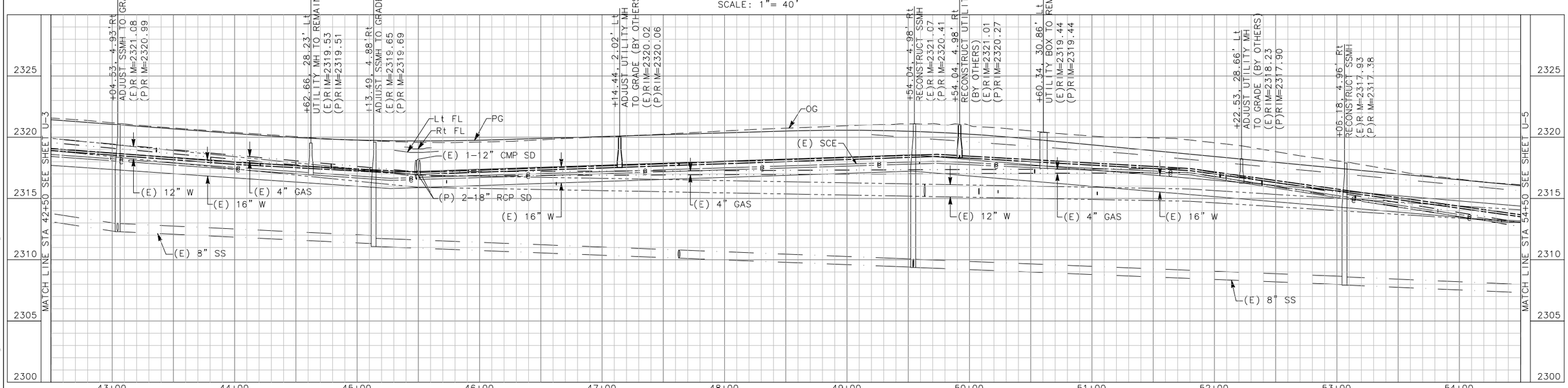

PROFILE

SCALE H: 1"= 40'
V: 1"= 4'

SHELF-READY PLANS - NOT FOR CONSTRUCTION

Project No.						
ST0101	CITY OF RIDGECREST W. RIDGECREST BOULEVARD RECONSTRUCTION PROJECT UTILITIES	REGISTERED PROFESSIONAL ENGINEER EDGAR A. NORIEGA No. 61555 Exp. 6/30/13 CIVIL STATE OF CALIFORNIA	MARK THOMAS & COMPANY, INC. 7571 N REMINGTON AVENUE, SUITE 102 FRESNO, CALIFORNIA 93720 (559) 447-1938 FAX: (559) 447-8586 WWW.MARKTHOMAS.COM MTCO JOB NUMBER: FN-09105	DATE: 11/18/2011 SCALE: DRAWN BY: KS/MB/JL CK'D BY: CG DATE CK'D:	Revisions	Checked By / Date Checked	SHEET NO. 45 U-4 OF 90 SHEETS

PATH: V:\Ridgecrest - FN-09105 - Ridgecrest Blvd\CADD\Drawing\ FILE NAME: RCB_U-1-U-7 PLOT DATE: Jan 31, 2012-03:18:39pm CAD USER: ksmith

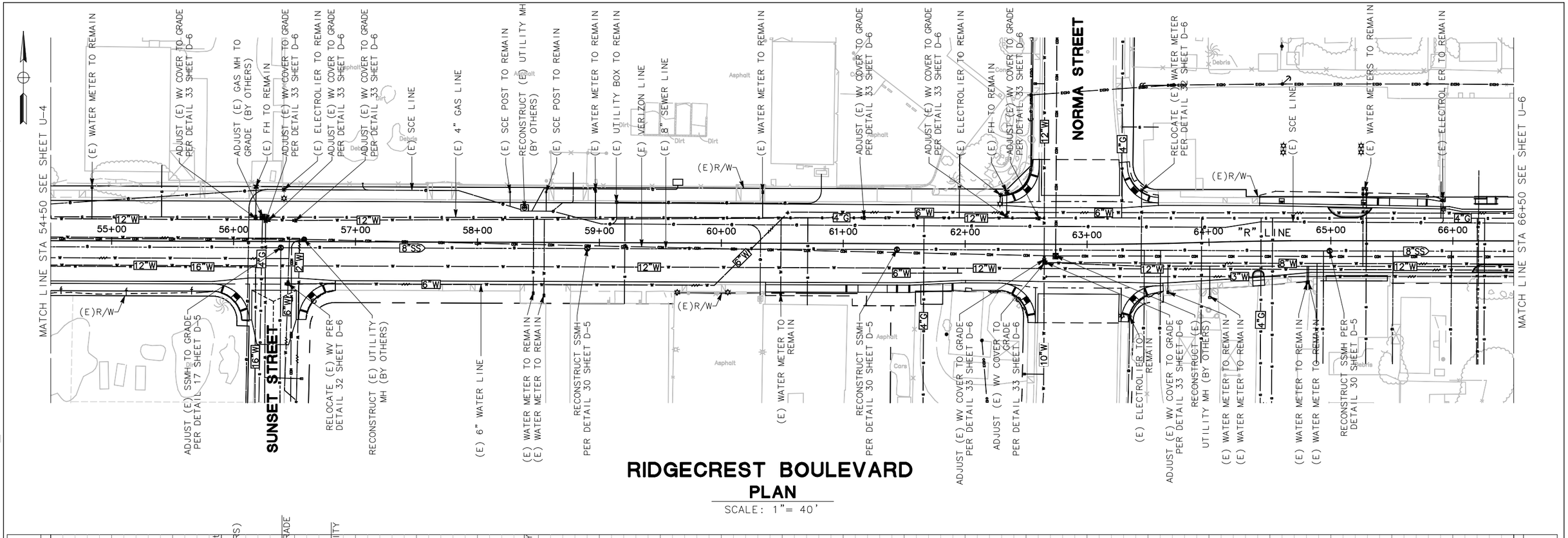

RIDGECREST BOULEVARD
PLAN
SCALE: 1"= 40'

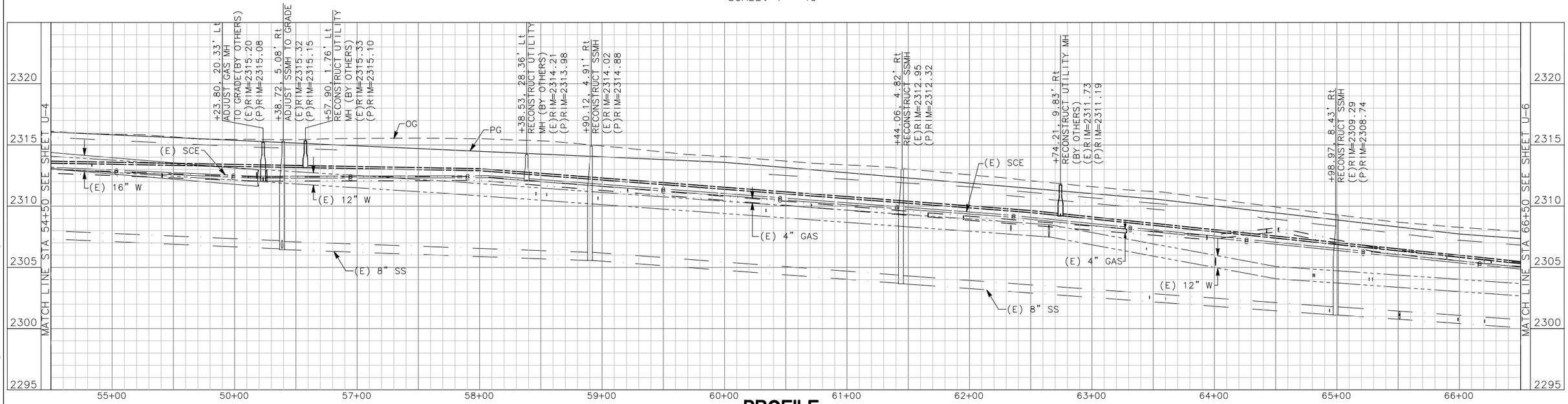

PROFILE
SCALE H: 1"= 40'
V: 1"= 4'

SHELF-READY PLANS - NOT FOR CONSTRUCTION

Project No.						
ST0101	CITY OF RIDGECREST W. RIDGECREST BOULEVARD RECONSTRUCTION PROJECT UTILITIES	REGISTERED PROFESSIONAL ENGINEER EDGAR A. NORIEGA No. 61555 Exp. 6/30/13 CIVIL STATE OF CALIFORNIA	MARK THOMAS & COMPANY, INC. 7571 N REMINGTON AVENUE, SUITE 102 FRESNO, CALIFORNIA 93720 (559) 447-1938 FAX: (559) 447-8586 WWW.MARKTHOMAS.COM MTCO JOB NUMBER: FN-09105	DATE: 11/18/2011 SCALE: DRAWN BY: KS/MB/JL CK'D BY: GC DATE CK'D:	Revisions	Checked By / Date Checked	SHEET NO. 46 U-5 OF 90 SHEETS

FILE NAME: RCB_U-1-U-7
PLOT DATE: Jan 31, 2012-03:18:44pm
CAD USER: ksmith
PATH: V:\Ridgecrest - FN-09105 - Ridgecrest Blvd\CADD\Drawing\

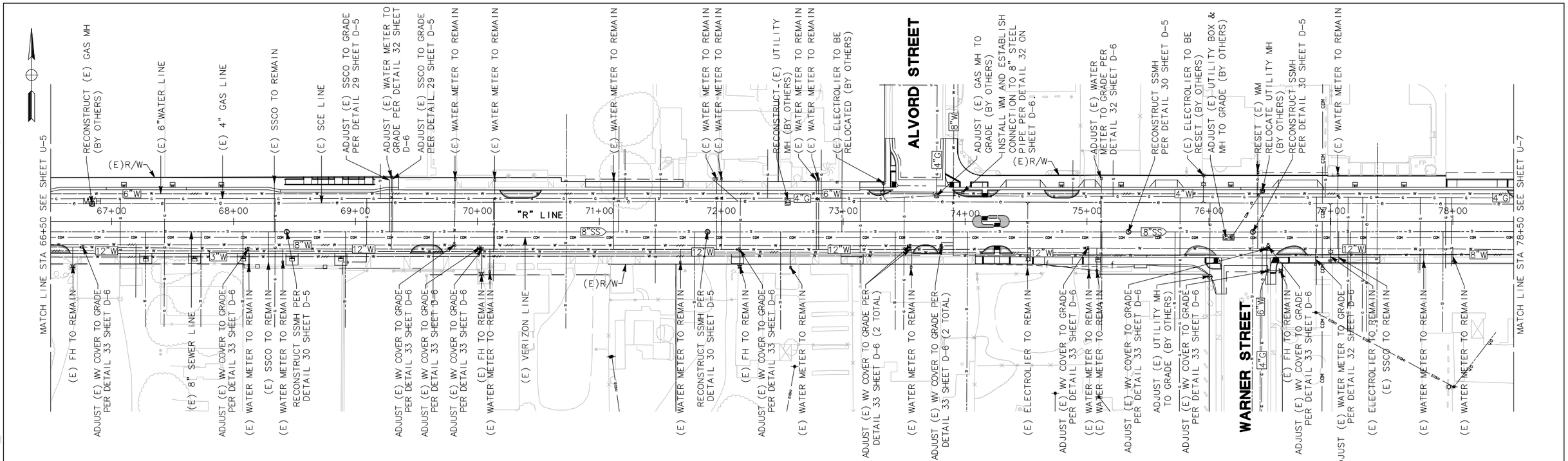

RIDGECREST BOULEVARD

PLAN

SCALE: 1"= 40'

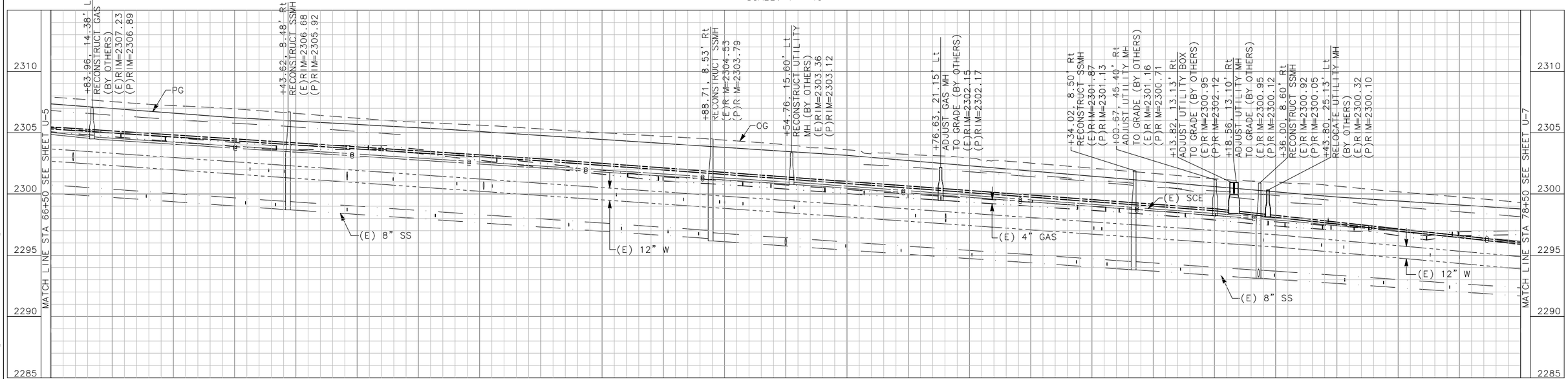

PROFILE

SCALE H: 1"= 40'
V: 1"= 4'

SHELF-READY PLANS - NOT FOR CONSTRUCTION

Project No.							
ST0101	CITY OF RIDGECREST W. RIDGECREST BOULEVARD RECONSTRUCTION PROJECT UTILITIES	REGISTERED PROFESSIONAL ENGINEER EDGAR A. NORIEGA No. 61555 Exp. 6/30/13 CIVIL STATE OF CALIFORNIA	MARK THOMAS & COMPANY, INC. 7571 N REMINGTON AVENUE, SUITE 102 FRESNO, CALIFORNIA 93720 (559) 447-1938 FAX: (559) 447-8586 WWW.MARKTHOMAS.COM MTCO JOB NUMBER: FN-09105	DATE: 11/18/2011 SCALE: DRAWN BY: KS/MB/JL CK'D BY: CG DATE CK'D:	Revisions	Checked By	Date Checked	SHEET NO. 47 U-6 OF 90 SHEETS

FILE NAME: RCB_U-1-U-7
PLOT DATE: Jan 31, 2012-03:18:47pm
CAD USER: ksmith
PATH: V:\Ridgecrest - FN-09105 - Ridgecrest Blvd\CADD\Drawing\

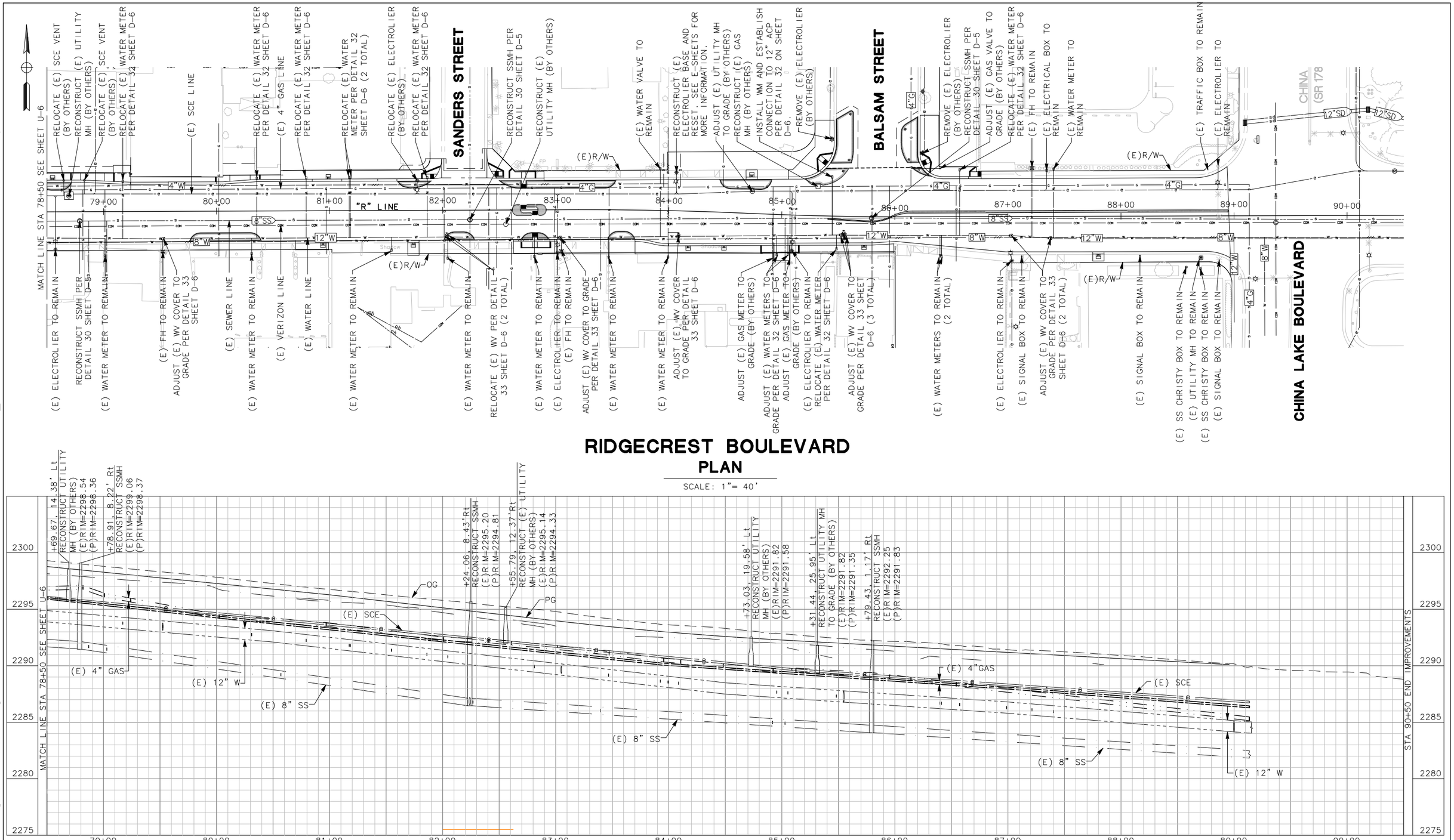

SHELF-READY PLANS - NOT FOR CONSTRUCTION

Project No.						
ST0101	CITY OF RIDGECREST W. RIDGECREST BOULEVARD RECONSTRUCTION PROJECT UTILITIES	REGISTERED PROFESSIONAL ENGINEER EDGAR A. NORIEGA No. 61555 Exp. 6/30/13 CIVIL STATE OF CALIFORNIA	MARK THOMAS & COMPANY, INC. 7571 N REMINGTON AVENUE, SUITE 102 FRESNO, CALIFORNIA 93720 (559) 447-1938 FAX: (559) 447-8586 WWW.MARKTHOMAS.COM MTCO JOB NUMBER: FN-09105	DATE: 11/18/2011 SCALE: DRAWN BY: KS/MB/JL CK'D BY: CC DATE CK'D:	Revisions	Checked By / Date Checked	SHEET NO. 48 U-7 OF 90 SHEETS

FILE NAME: RCB_U-1-U-7 PLOT DATE: Jan 31, 2012-03:18:49pm CAD USER: ksmith
PATH: V:\Ridgecrest - FN-09105 - Ridgecrest Blvd\CADD\Drawing\

TRAFFIC STAGE 1

1. SHIFT TRAFFIC LANES NORTH AS SHOWN ON TRAFFIC HANDLING SHEETS TH-1 THROUGH TH-5.

CONSTRUCTION STAGE 1

(1) CONSTRUCT IMPROVEMENTS WITHIN AREA SHOWN FOR THIS STAGE, SEE SHEETS TH-1 THROUGH TH-5. BULB-OUTS TO BE FILLED WITH 9" CLASS II AB COMPACTED TO 95% RELATIVE COMPACTION.

GENERAL NOTES

1. WORK NOT NECESSARY FOR STAGING OPERATION CAN BE DONE AT ANY TIME AND IS NOT SHOWN.

LEGEND

CONSTRUCTION THIS STAGE

SIGNALIZED INTERSECTION

DIRECTION OF TRAVEL ARROW

(No) CONSTRUCTION ITEM THIS STAGE

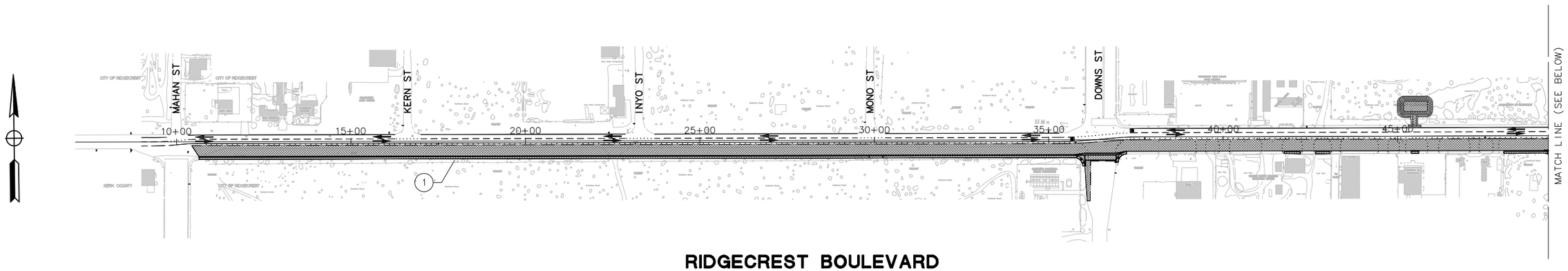

RIDGECREST BOULEVARD

SCALE: 1"= 150'

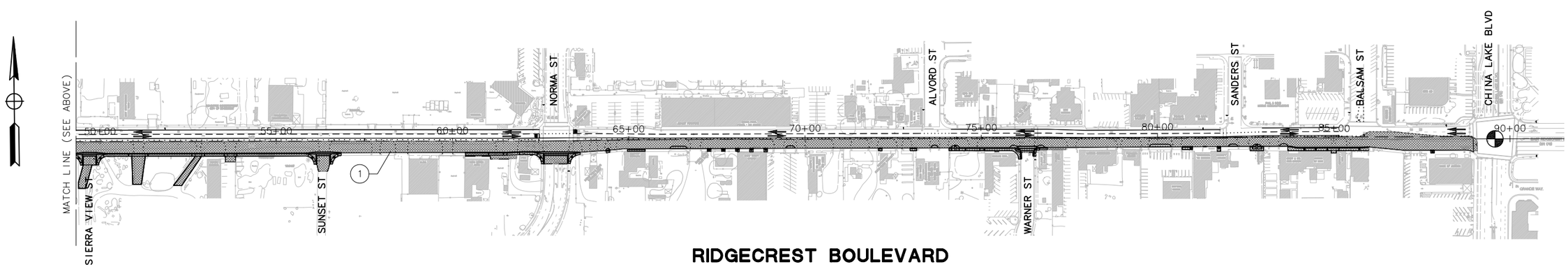

RIDGECREST BOULEVARD

SCALE: 1"= 150'

SHELF-READY PLANS - NOT FOR CONSTRUCTION

THIS PLAN ACCURATE FOR TRAFFIC HANDLING ONLY.
ALL DIMENSIONS ARE IN FEET UNLESS OTHERWISE SHOWN.

Project No.	
ST0101	CITY OF RIDGECREST W. RIDGECREST BOULEVARD RECONSTRUCTION PROJECT STAGE 1 CONSTRUCTION

REGISTERED PROFESSIONAL ENGINEER — EDGAR A. NORIEGA — No. 61555 — Exp. 6/30/13 — CIVIL — STATE OF CALIFORNIA

MARK THOMAS & COMPANY, INC.
7571 N REMINGTON AVENUE, SUITE 102
FRESNO, CALIFORNIA 93720
(559) 447-1938 FAX: (559) 447-8586
WWW.MARKTHOMAS.COM
MTCO JOB NUMBER: FN-09105

DATE:	11/18/2011
SCALE:	1"=150'
DRAWN BY:	KS/MB/JL
CK'D BY:	GC
DATE CK'D:	

Revisions	Checked By	Date Checked

SHEET NO. 49

SC-1

OF 90 SHEETS

CAD USER: ksmith
PLOT DATE: Jan 31, 2012-03:18:58pm
FILE NAME: RCB_SC-1
PATH: V:\Ridgecrest - FN-09105 - Ridgecrest Blvd\CADD\Drawing\

TRAFFIC STAGE 2

1. SHIFT TRAFFIC LANES SOUTH AS SHOWN ON TRAFFIC HANDLING SHEETS TH-6 THROUGH TH-10.

CONSTRUCTION STAGE 2

(1) CONSTRUCT IMPROVEMENTS WITHIN AREA SHOWN FOR THIS STAGE, SEE SHEETS TH-6 THROUGH TH-10. UPON COMPLETION OF THIS STAGE, PERMANENT STRIPING IS TO BE LAID AND TEMPORARY STRIPING ON THE SOUTH SIDE OF RIDGECREST SHALL BE REMOVED.

DOWNS STREET AND NORMA STREET SHALL REMAIN STOP CONTROLLED UNTIL THE SIGNALS ARE FUNCTIONAL.

GENERAL NOTES

1. WORK NOT NECESSARY FOR STAGING OPERATION CAN BE DONE AT ANY TIME AND IS NOT SHOWN.

LEGEND

CONSTRUCTION THIS STAGE

SIGNALIZED INTERSECTION

DIRECTION OF TRAVEL ARROW

(No) CONSTRUCTION ITEM THIS STAGE

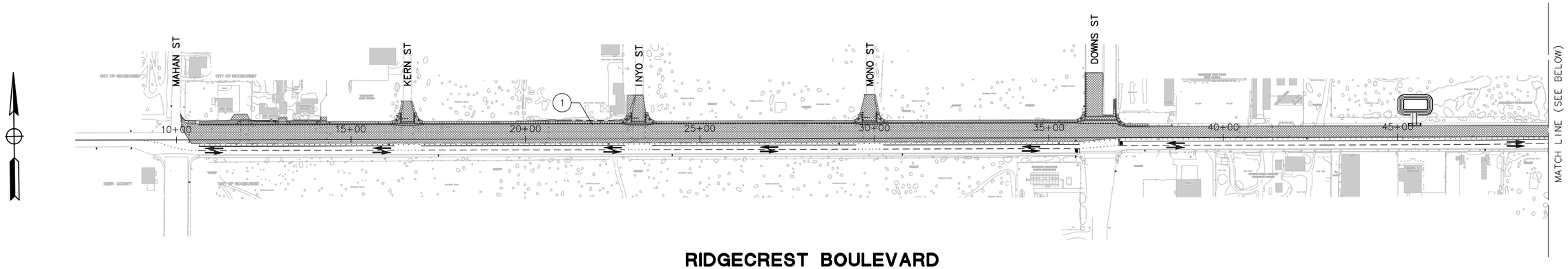

RIDGECREST BOULEVARD

SCALE: 1"= 150'

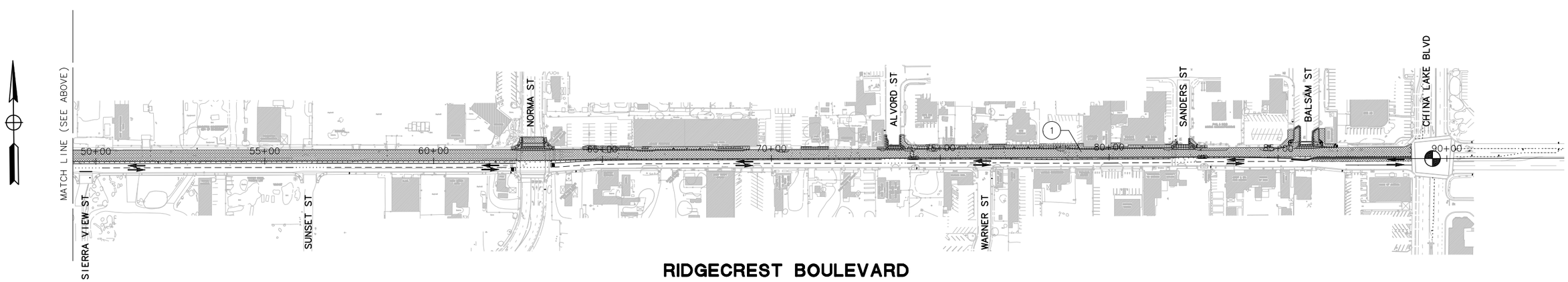

RIDGECREST BOULEVARD

SCALE: 1"= 150'

THIS PLAN ACCURATE FOR TRAFFIC HANDLING ONLY.
ALL DIMENSIONS ARE IN FEET UNLESS OTHERWISE SHOWN.

SHELF-READY PLANS - NOT FOR CONSTRUCTION

Project No.			
ST0101	CITY OF RIDGECREST W. RIDGECREST BOULEVARD RECONSTRUCTION PROJECT STAGE 2 CONSTRUCTION	REGISTERED PROFESSIONAL ENGINEER EDGAR A. NORIEGA No. 61555 Exp. 6/30/13 CIVIL STATE OF CALIFORNIA	MARK THOMAS & COMPANY, INC. 7571 N REMINGTON AVENUE, SUITE 102 FRESNO, CALIFORNIA 93720 (559) 447-1938 FAX: (559) 447-8586 WWW.MARKTHOMAS.COM MTCO JOB NUMBER: FN-09105

DATE: 11/18/2011	Revisions	Checked By	Date Checked
SCALE: 1"=150'			
DRAWN BY: KS/MB/JL			
CK'D BY: CG			
DATE CK'D:			

SHEET NO. 50

SC-2

OF 90 SHEETS

CAD USER: ksmith
PLOT DATE: Jan 31, 2012-03:19:07pm
FILE NAME: RCB_SC-2
PATH: V:\Ridgecrest - FN-09105 - Ridgecrest Blvd\CADD\Drawing\

NOTES

1. CONSTRUCTION AREA SIGNS SHOWN ARE REQUIRED FOR STAGE CONSTRUCTION.
2. LOCATIONS OF CONSTRUCTION AREA SIGNS SHOWN ARE APPROXIMATE. EXACT LOCATIONS TO BE DETERMINED BY THE ENGINEER.
3. ALL EXISTING SIGNS NOT SHOWN ON TRAFFIC HANDLING PLANS FOR REMOVAL OR RELOCATION ARE SHOWN ON THE SIGN PLANS.
4. PERMANENT ROADWAY SIGN NECESSARY FOR TRAFFIC HANDLING SHALL BE IN PLACE BEFORE REQUIRED BY CONSTRUCTION STAGING. FOR PERMANENT SIGNS SEE SIGN PLANS.
5. EXISTING ROADWAY SIGNS NOT SHOWN ARE TO REMAIN.
6. ALL TEMPORARY TRAFFIC STRIPES AND MARKINGS PLACED IN STAGES 1 & 2 SHALL BE TAPE.
7. ALL EXISTING OR TEMPORARY STRIPING AND MARKINGS THAT CONFLICTS WITH NEW TEMPORARY STRIPING AND MARKINGS SHALL BE REMOVED DURING THE SAME WORK SHIFT.
8. DRIVEWAY ACCESS MUST BE MAINTAINED WHEN THERE IS NO WORK ACTIVITY. AT LEAST ONE DRIVEWAY SHALL BE MAINTAINED AT ALL TIME TO EACH SITE. USE PORTABLE DELINEATORS 3' O.C. TO CLOSE OFF DRIVEWAYS WHILE WORK IS UNDERWAY.
9. ALL EXISTING BIKE LANE SIGNS SHALL BE COVERED PRIOR TO BEGINNING OF STAGE 1 CONSTRUCTION.

TRAFFIC THIS STAGE

1. SHIFT EB AND WB TRAFFIC LANES NORTH. REMOVE CONFLICTING STRIPING AND PLACE TEMPORARY STRIPING AS SHOWN.

CONSTRUCTION THIS STAGE

1. CONSTRUCT IMPROVEMENTS WITHIN AREA SHOWN FOR THIS STAGE. BULB-OUTS TO BE FILLED WITH 9" CLASS II AB COMPACTED TO 95% RELATIVE COMPACTION.
2. CONSTRUCT TEMPORARY AC CONFORMS AT INTERSECTIONS AND DRIVEWAYS. SLOPE NOT TO EXCEED 10%.

LEGEND

	CONSTRUCTION THIS STAGE	NO	TEMP TRAFFIC STRIPE DETAIL NUMBER PER CALTRANS STD. A20A
·····	CHANNELIZER (SURFACE MOUNTED) PER DETAIL 19 ON SHEET D-2	NO	DENOTES EXISTING DETAIL NUMBER PER CALTRANS STD PLANS
*	CONSTRUCTION AREA SIGN	△	RELOCATE CONSTRUCTION AREA SIGN
OC	ON CENTER	•	CONSTRUCTION AREA SIGN TO REMAIN
///	REMOVE EXISTING STRIPING	□	REMOVE EXISTING SIGN
∘	BEGINNING/END OF CURVE	←	DIRECTIONAL ARROW
△	ANGLE POINT	⊢⊣	CHANGE OF STRIPING DETAIL
·	DOT MARKING		

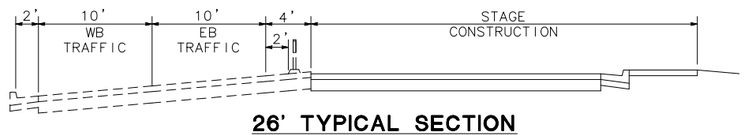

26' TYPICAL SECTION

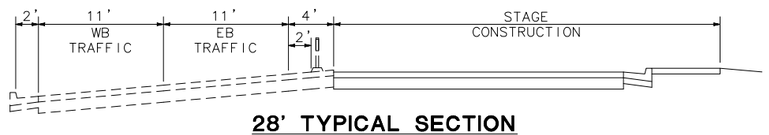

28' TYPICAL SECTION

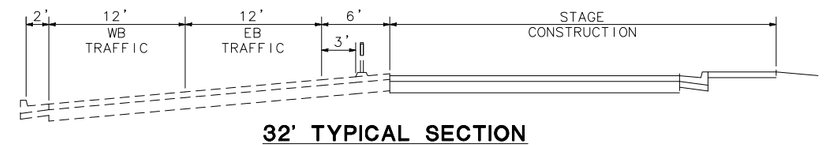

32' TYPICAL SECTION

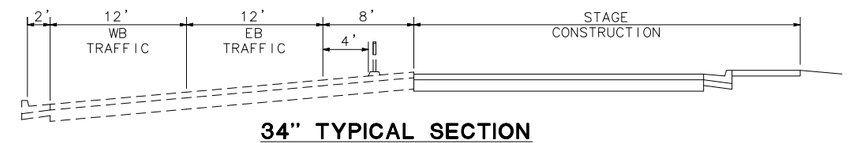

34" TYPICAL SECTION

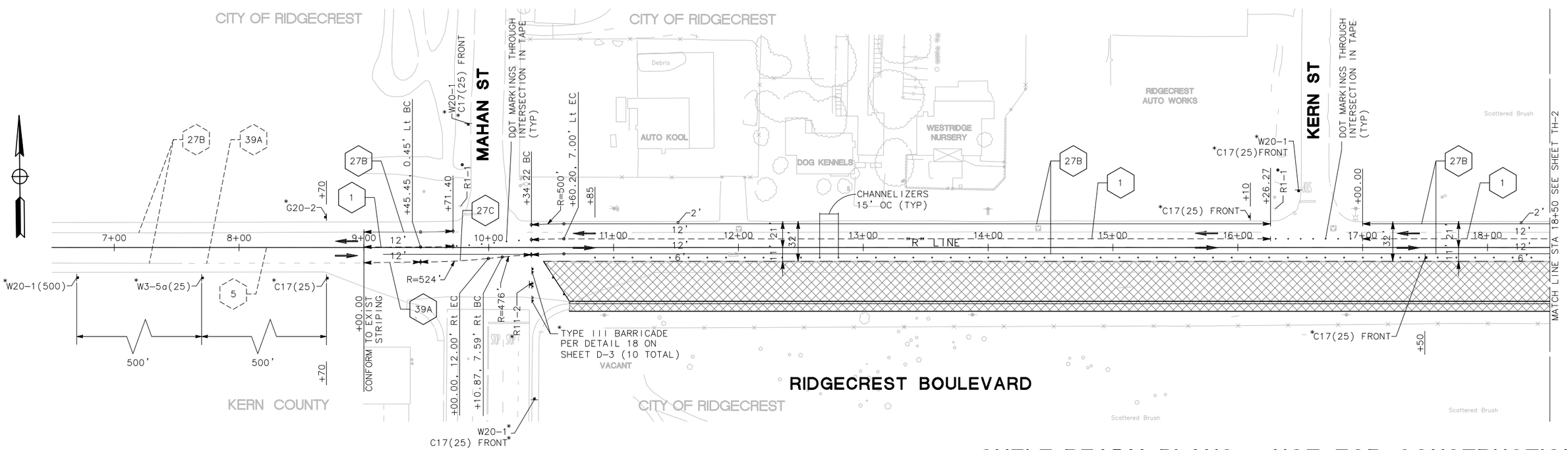

SHELF-READY PLANS - NOT FOR CONSTRUCTION

THIS PLAN ACCURATE FOR TRAFFIC HANDLING ONLY.
ALL DIMENSIONS ARE IN FEET UNLESS OTHERWISE SHOWN.

Project No.							
ST0101	CITY OF RIDGECREST W. RIDGECREST BOULEVARD RECONSTRUCTION PROJECT TRAFFIC HANDLING - STAGE 1	REGISTERED PROFESSIONAL ENGINEER EDGAR A. NORIEGA No. 61555 Exp. 6/30/13 CIVIL STATE OF CALIFORNIA	MARK THOMAS & COMPANY, INC. 7571 N REMINGTON AVENUE, SUITE 102 FRESNO, CALIFORNIA 93720 (559) 447-1938 FAX: (559) 447-8586 WWW.MARKTHOMAS.COM MTCO JOB NUMBER: FN-09105	DATE: 11/18/2011 SCALE: 1"=40' DRAWN BY: KS/MB/JL CK'D BY: CG DATE CK'D:	Revisions	Checked By	Date Checked	SHEET NO. 51 TH-1 OF 90 SHEETS

CAD USER: ksmith
PLOT DATE: Jan 31, 2012-03:19:11pm
FILE NAME: RCB_TH1-1-TH1-5
PATH: V:\Ridgecrest - FN-09105 - Ridgecrest Blvd\CADD\Drawing\

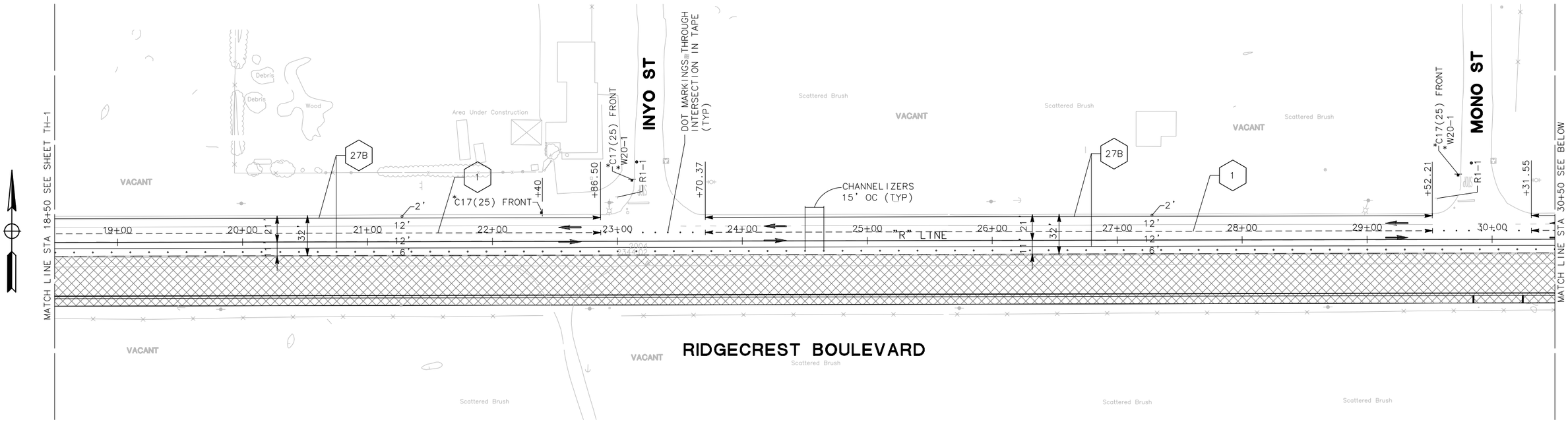

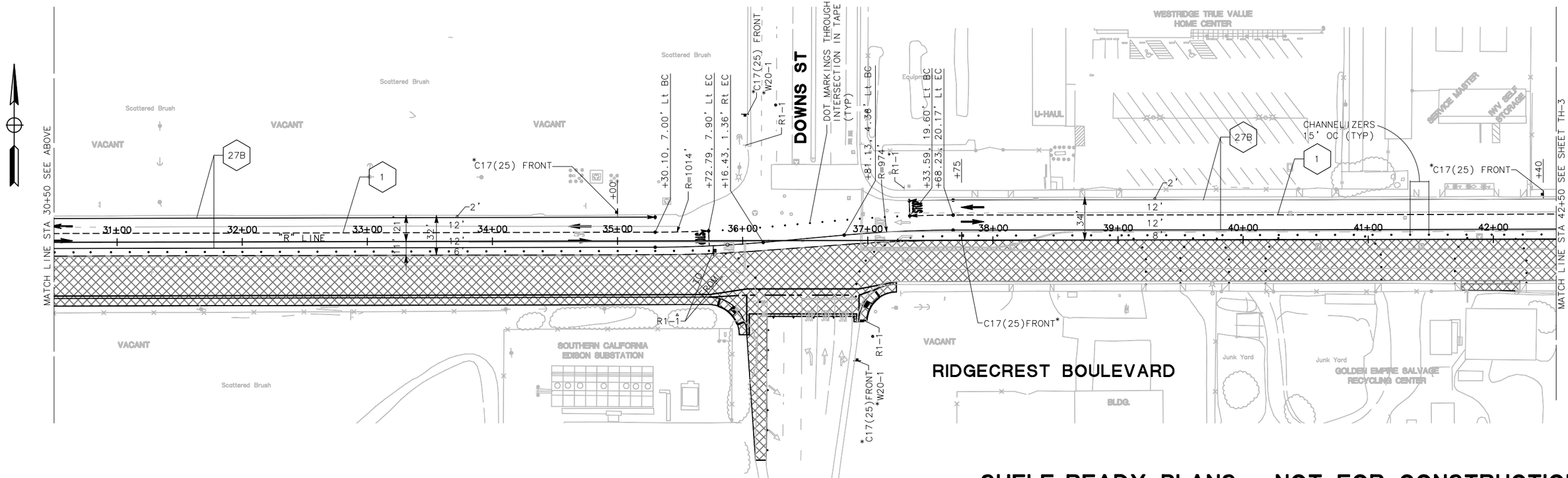

SHELF-READY PLANS - NOT FOR CONSTRUCTION

THIS PLAN ACCURATE FOR TRAFFIC HANDLING ONLY.
ALL DIMENSIONS ARE IN FEET UNLESS OTHERWISE SHOWN.

Project No.		
ST0101	CITY OF RIDGECREST W. RIDGECREST BOULEVARD RECONSTRUCTION PROJECT TRAFFIC HANDLING - STAGE 1	REGISTERED PROFESSIONAL ENGINEER EDGAR A. NORIEGA No. 61555 Exp. 6/30/13 CIVIL STATE OF CALIFORNIA

MARK THOMAS & COMPANY, INC.
7571 N REMINGTON AVENUE, SUITE 102
FRESNO, CALIFORNIA 93720
(559) 447-1938 FAX: (559) 447-8586
WWW.MARKTHOMAS.COM
MTCO JOB NUMBER: FN-09105

DATE:	11/18/2011
SCALE:	1"=40'
DRAWN BY:	KS/MB/JL
CK'D BY:	CC
DATE CK'D:	

Revisions	Checked By	Date Checked

SHEET NO. 52

TH-2

OF 90 SHEETS

PATH: V:\Ridgecrest - FN-09105 - Ridgecrest Blvd\CADD\Drawing\
FILE NAME: RCB_TH1-1-TH1-5
PLOT DATE: Jan 31, 2012-03:19:21pm
CAD USER: ksmith

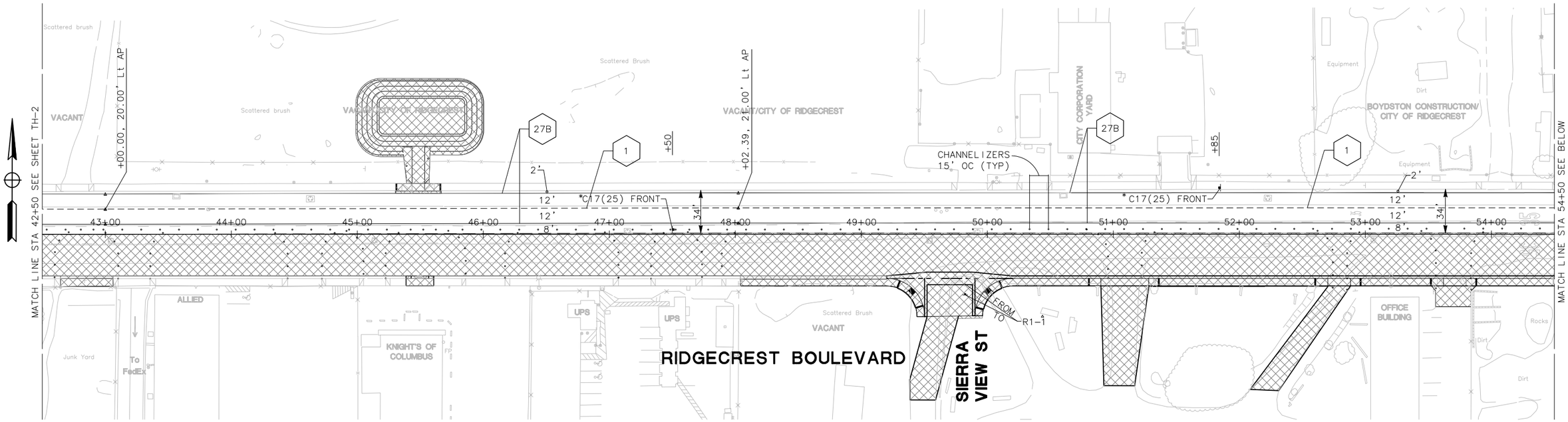

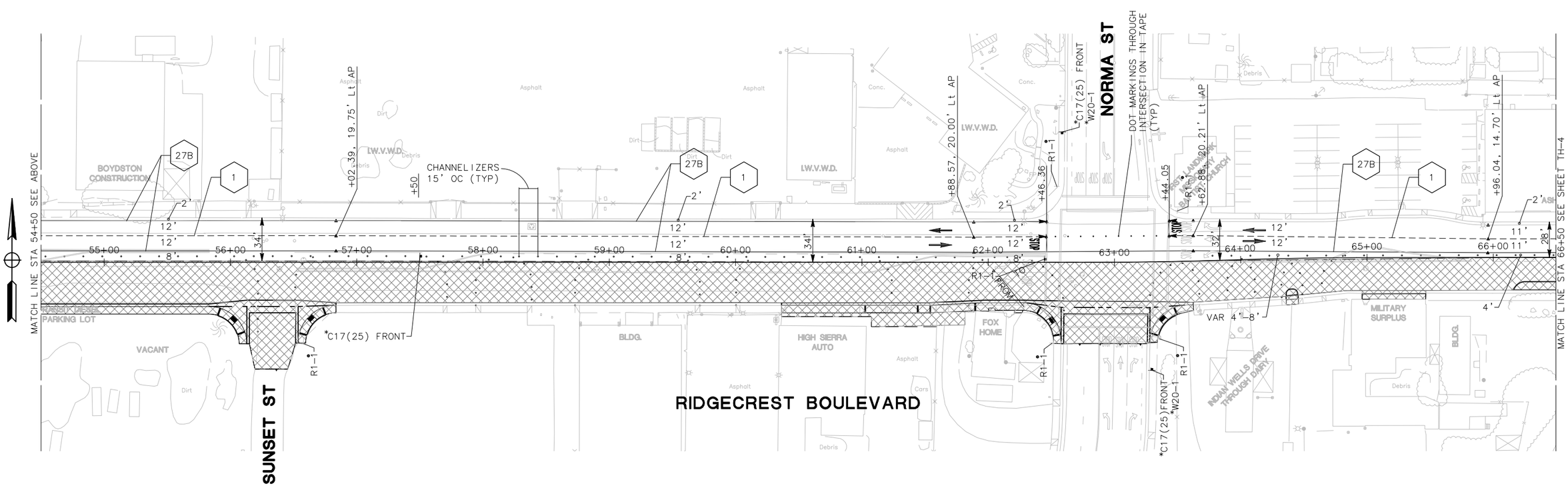

SHELF-READY PLANS - NOT FOR CONSTRUCTION

THIS PLAN ACCURATE FOR TRAFFIC HANDLING ONLY.
ALL DIMENSIONS ARE IN FEET UNLESS OTHERWISE SHOWN.

Project No.	CITY OF RIDGECREST W. RIDGECREST BOULEVARD RECONSTRUCTION PROJECT TRAFFIC HANDLING - STAGE 1	REGISTERED PROFESSIONAL ENGINEER EDGAR A. NORIEGA No. 61555 Exp. 6/30/13 CIVIL STATE OF CALIFORNIA	MARK THOMAS & COMPANY, INC. 7571 N REMINGTON AVENUE, SUITE 102 FRESNO, CALIFORNIA 93720 (559) 447-1938 FAX: (559) 447-8586 WWW.MARKTHOMAS.COM MTCO JOB NUMBER: FN-09105	DATE: 11/18/2011 SCALE: 1"=40' DRAWN BY: KS/MB/JL CK'D BY: GG DATE CK'D:	Revisions	Checked By	Date Checked	SHEET NO. 53
ST0101								TH-3 OF 90 SHEETS

PATH: V:\Ridgecrest - FN-09105 - Ridgecrest Blvd\CADD\Drawing\ FILE NAME: RCB_TH1-1-TH1-5 PLOT DATE: Jan 31, 2012-03:19:23pm CAD USER: ksmith

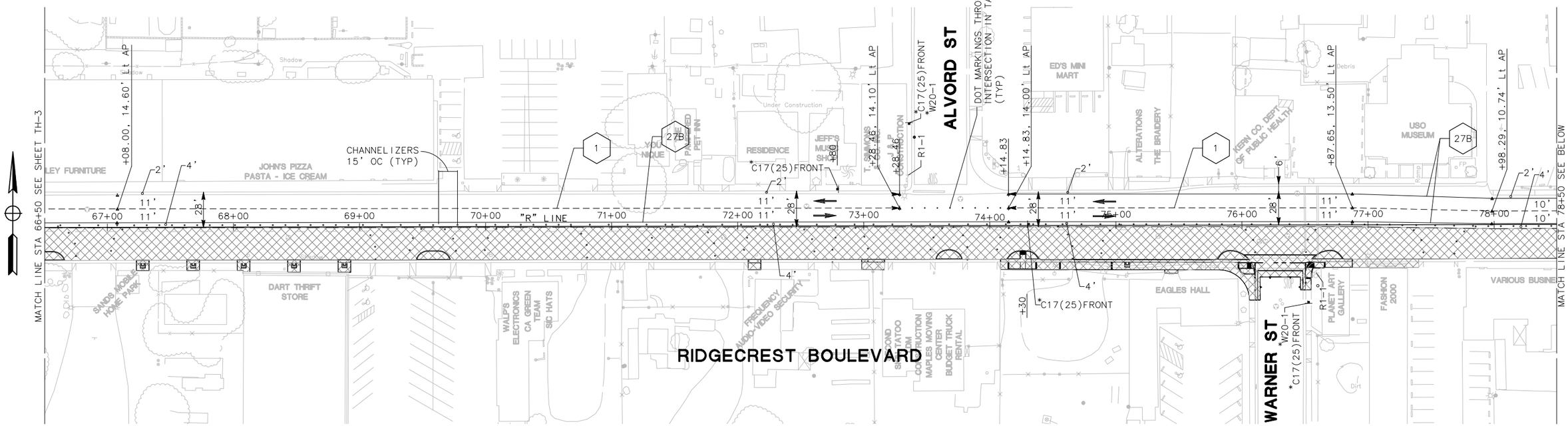

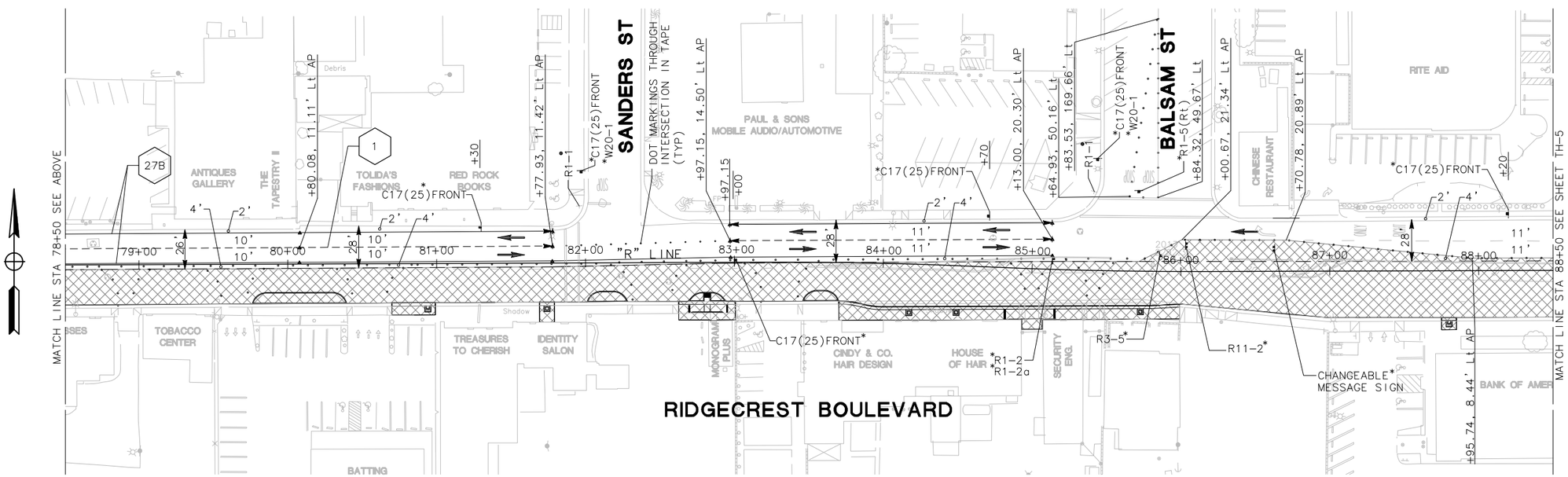

THIS PLAN ACCURATE FOR TRAFFIC HANDLING ONLY.
ALL DIMENSIONS ARE IN FEET UNLESS OTHERWISE SHOWN.

SHELF-READY PLANS - NOT FOR CONSTRUCTION

Project No.	CITY OF RIDGECREST W. RIDGECREST BOULEVARD RECONSTRUCTION PROJECT TRAFFIC HANDLING - STAGE 1	REGISTERED PROFESSIONAL ENGINEER EDGAR A. NORIEGA No. 61555 Exp. 6/30/13 CIVIL STATE OF CALIFORNIA	MARK THOMAS & COMPANY, INC. 7571 N REMINGTON AVENUE, SUITE 102 FRESNO, CALIFORNIA 93720 (559) 447-1938 FAX: (559) 447-8586 WWW.MARKTHOMAS.COM MTCO JOB NUMBER: FN-09105	DATE: 11/18/2011 SCALE: 1"=40' DRAWN BY: KS/MB/JL CK'D BY: GC DATE CK'D:	Revisions	Checked By	Date Checked	SHEET NO. 54 TH-4 OF 90 SHEETS
ST0101								

PATH: V:\Ridgecrest - FN-09105 - Ridgecrest Blvd\CADD\Drawing\ FILE NAME: RCB_TH1-1-TH1-5 PLOT DATE: Jan 31, 2012-03:19:26pm CAD USER: ksmith

NOTE:

1. REFER TO CALTRANS STANDARD PLAN T10 FOR TRAFFIC CONTROL ON SR178.
2. SIGN LOCATIONS TO BE APPROVED BY THE ENGINEER.

CONSTRUCTION AREA SIGNS							
SIGN	SIGN CODE		PANEL SIZE	SIGN MESSAGE	DIRECTIONAL ARROW	NO. OF POST & SIZE	NO. OF SIGNS
	FEDERAL	CALIFORNIA	(IN)				
A	W20-1	C23(CA)	36 x 36	ROAD WORK AHEAD		1 – 4x4(S)	1
B	W20-5	C20(CA)	36 x 36	RIGHT LANE CLOSED AHEAD		1 – 4x4(S)	1
C	M4-10L		48 x 18	DETOUR	LEFT	1 – 4x4(S)	1
D	M4-10R		48 x 18	DETOUR	RIGHT	1 – 4x4(S)	2
E		SC3(CA)	36 x 12	DETOUR	UPWARD	1 – 4x4(S)	3
F	M4-8a		24 x 18	END DETOUR		1 – 4x4(S)	1

NOTES:

1. LOCATIONS OF CONSTRUCTION AREA SIGNS SHOWN ARE APPROXIMATE. EXACT LOCATIONS WILL BE DETERMINED BY ENGINEER.
2. (S) DENOTES STATIONARY MOUNTED SIGN(S).
3. SEE SHEET THQ-1 FOR GRAPHIC SIGN LEGEND.

① PLACE SIGN MID BLOCK

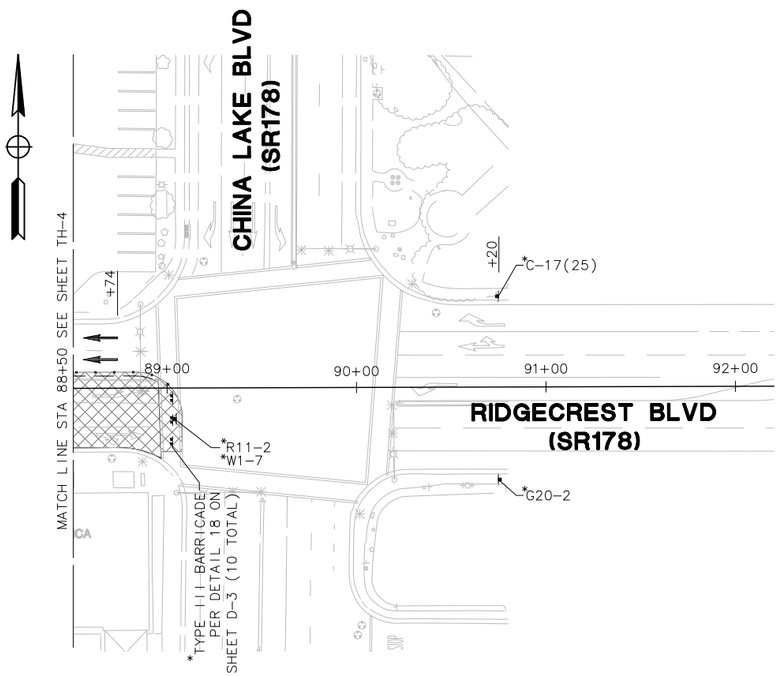

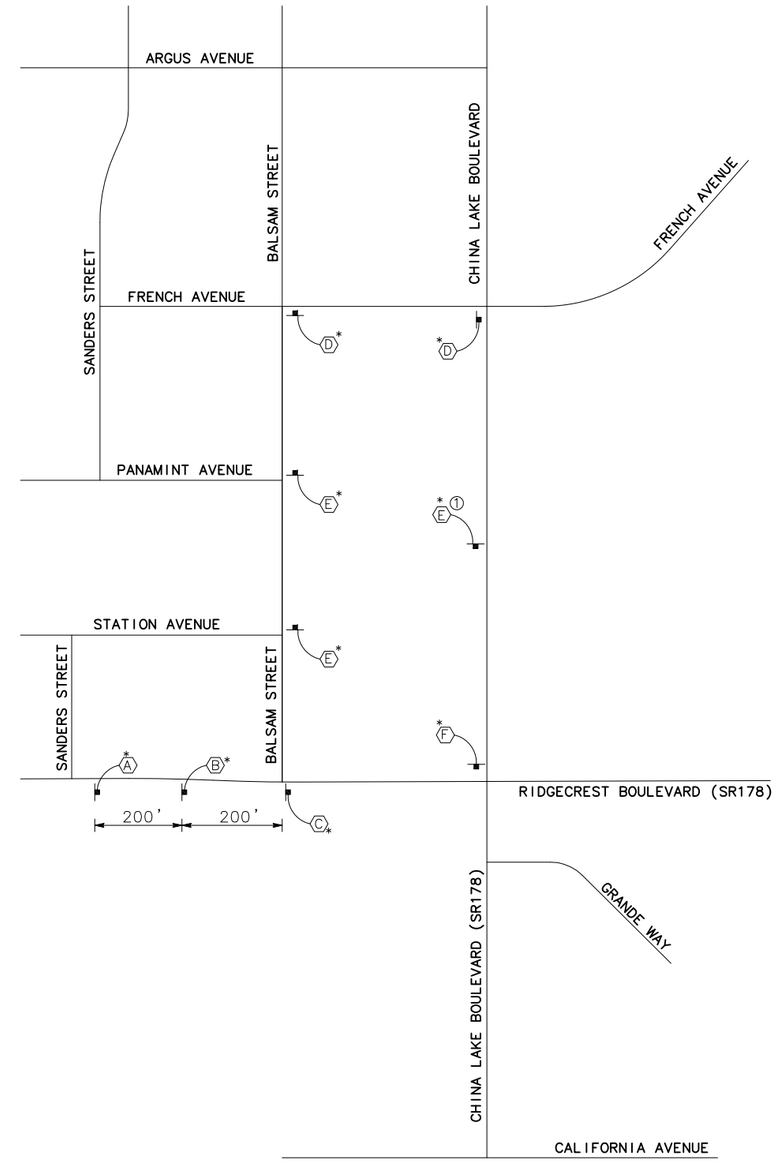

DETOUR PLAN

NTS

THIS PLAN ACCURATE FOR TRAFFIC HANDLING ONLY.
ALL DIMENSIONS ARE IN FEET UNLESS OTHERWISE SHOWN.

SHELF-READY PLANS - NOT FOR CONSTRUCTION

Project No.	
ST0101	CITY OF RIDGECREST W. RIDGECREST BOULEVARD RECONSTRUCTION PROJECT TRAFFIC HANDLING - STAGE 1

REGISTERED PROFESSIONAL ENGINEER — EDGAR A. NORIEGA, No. 61555, Exp. 6/30/13, CIVIL, STATE OF CALIFORNIA

MARK THOMAS & COMPANY, INC.
7571 N REMINGTON AVENUE, SUITE 102
FRESNO, CALIFORNIA 93720
(559) 447-1938 FAX: (559) 447-8586
WWW.MARKTHOMAS.COM
MTCO JOB NUMBER: FN-09105

DATE: 11/18/2011
SCALE: 1"=40'
DRAWN BY: KS/MB/JL
CK'D BY: GG
DATE CK'D:

Revisions	Checked By	Date Checked

SHEET NO. 55

TH-5

OF 90 SHEETS

PATH: V:\Ridgecrest - FN-09105 - Ridgecrest Blvd\CADD\Drawing\
FILE NAME: RCB_TH1-1-TH1-5
PLOT DATE: Jan 31, 2012-03:19:28pm
CAD USER: ksmith

TRAFFIC THIS STAGE

1. SHIFT EB AND WB TRAFFIC LANES SOUTH. PLACE TEMPORARY STRIPING AS SHOWN.

CONSTRUCTION THIS STAGE

1. CONSTRUCT IMPROVEMENTS WITHIN AREA SHOWN FOR THIS STAGE.
2. MEDIANS ARE TO BE TYPE 4 CURB CONSTRUCTED AFTER ROADWAY CONSTRUCTION IS COMPLETE FOR SC-2.

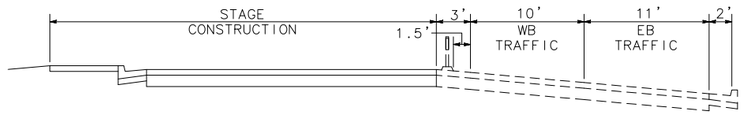

24' TYPICAL SECTION

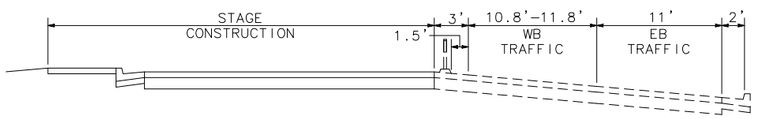

26' TYPICAL SECTION

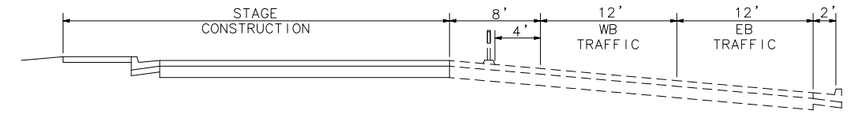

32' TYPICAL SECTION

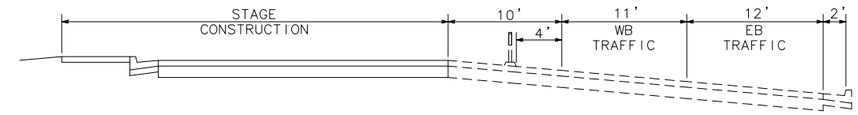

33' TYPICAL SECTION

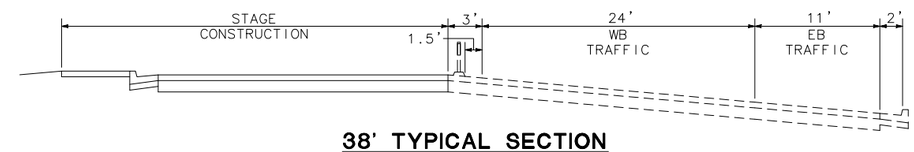

38' TYPICAL SECTION

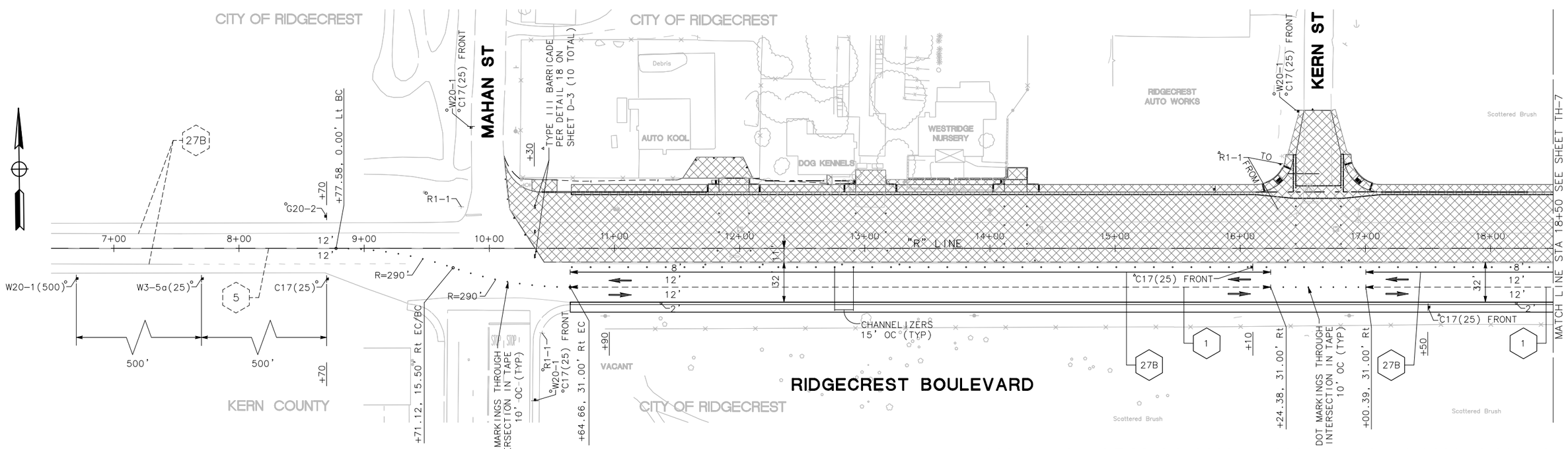

SHELF-READY PLANS - NOT FOR CONSTRUCTION

THIS PLAN ACCURATE FOR TRAFFIC HANDLING ONLY.
ALL DIMENSIONS ARE IN FEET UNLESS OTHERWISE SHOWN.

Project No.			
ST0101	CITY OF RIDGECREST W. RIDGECREST BOULEVARD RECONSTRUCTION PROJECT TRAFFIC HANDLING - STAGE 2	REGISTERED PROFESSIONAL ENGINEER EDGAR A. NORIEGA No. 61555 Exp. 6/30/13 CIVIL STATE OF CALIFORNIA	MARK THOMAS & COMPANY, INC. 7571 N REMINGTON AVENUE, SUITE 102 FRESNO, CALIFORNIA 93720 (559) 447-1938 FAX: (559) 447-8586 WWW.MARKTHOMAS.COM MTCO JOB NUMBER: FN-09105

DATE:	11/18/2011
SCALE:	1"=40'
DRAWN BY:	KS/MB/JL
CK'D BY:	CG
DATE CK'D:	

Revisions	Checked By	Date Checked	SHEET NO. 56
			TH-6
			OF 90 SHEETS

CAD USER: ksmith
PLOT DATE: Jan 31, 2012-03:19:36pm
FILE NAME: RCB_TH2-6-TH2-10
PATH: V:\Ridgecrest - FN-09105 - Ridgecrest Blvd\CADD\Drawing\

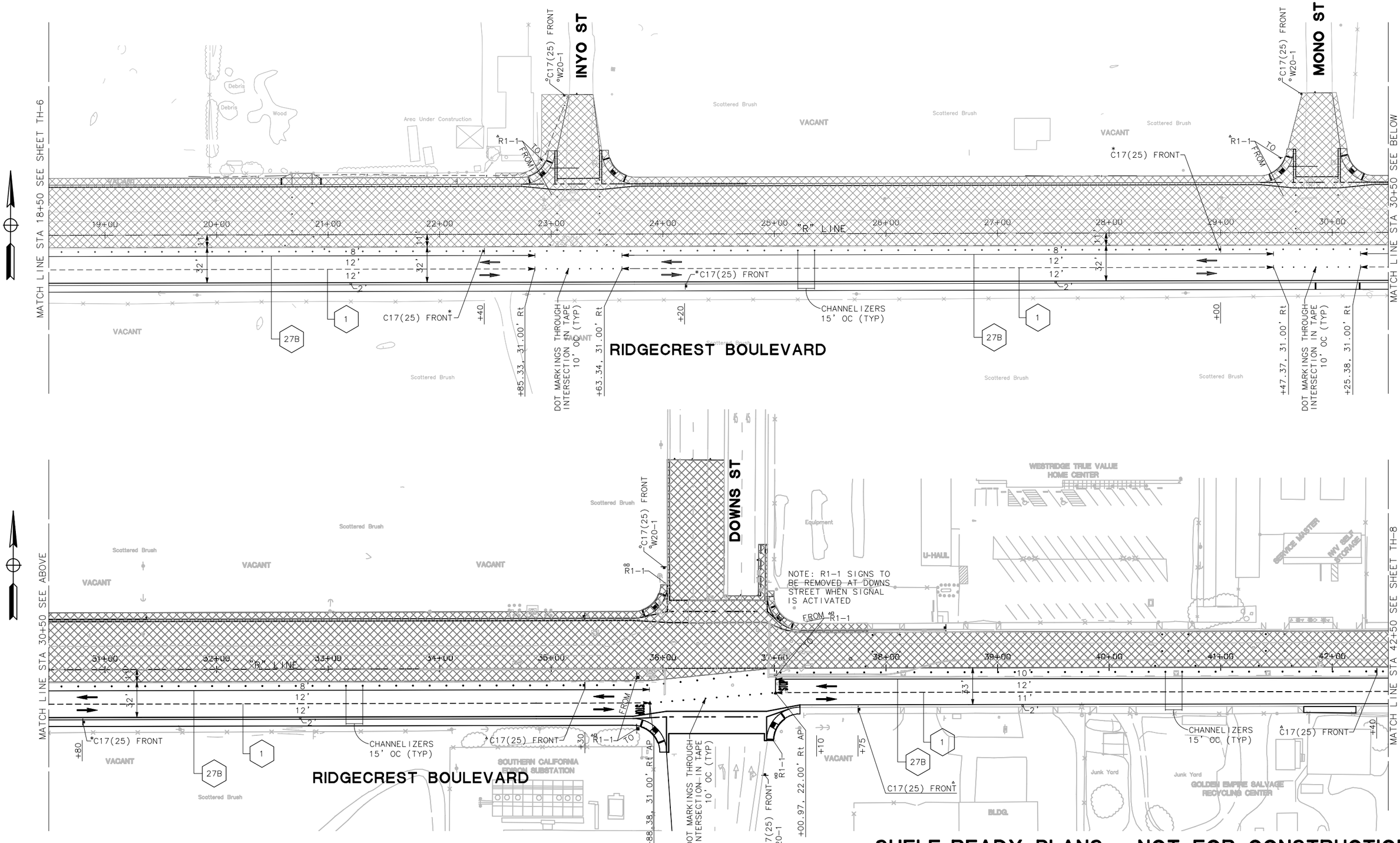

SHELF-READY PLANS - NOT FOR CONSTRUCTION

THIS PLAN ACCURATE FOR TRAFFIC HANDLING ONLY.
ALL DIMENSIONS ARE IN FEET UNLESS OTHERWISE SHOWN.

Project No.			
ST0101	CITY OF RIDGECREST W. RIDGECREST BOULEVARD RECONSTRUCTION PROJECT TRAFFIC HANDLING - STAGE 2	REGISTERED PROFESSIONAL ENGINEER EDGAR A. NORIEGA No. 61555 Exp. 6/30/13 CIVIL STATE OF CALIFORNIA	MARK THOMAS & COMPANY, INC. 7571 N REMINGTON AVENUE, SUITE 102 FRESNO, CALIFORNIA 93720 (559) 447-1938 FAX: (559) 447-8586 WWW.MARKTHOMAS.COM MTCO JOB NUMBER: FN-09105

DATE:	11/18/2011
SCALE:	1"=40'
DRAWN BY:	KS/MB/JL
CK'D BY:	CC
DATE CK'D:	

Revisions	Checked By	Date Checked	SHEET NO. 57
			TH-7
			OF 90 SHEETS

PATH: V:\Ridgecrest - FN-09105 - Ridgecrest Blvd\CADD\Drawing\
FILE NAME: RCB_TH2-6-TH2-10
PLOT DATE: Jan 31, 2012-03:19:51pm
CAD USER: ksmith

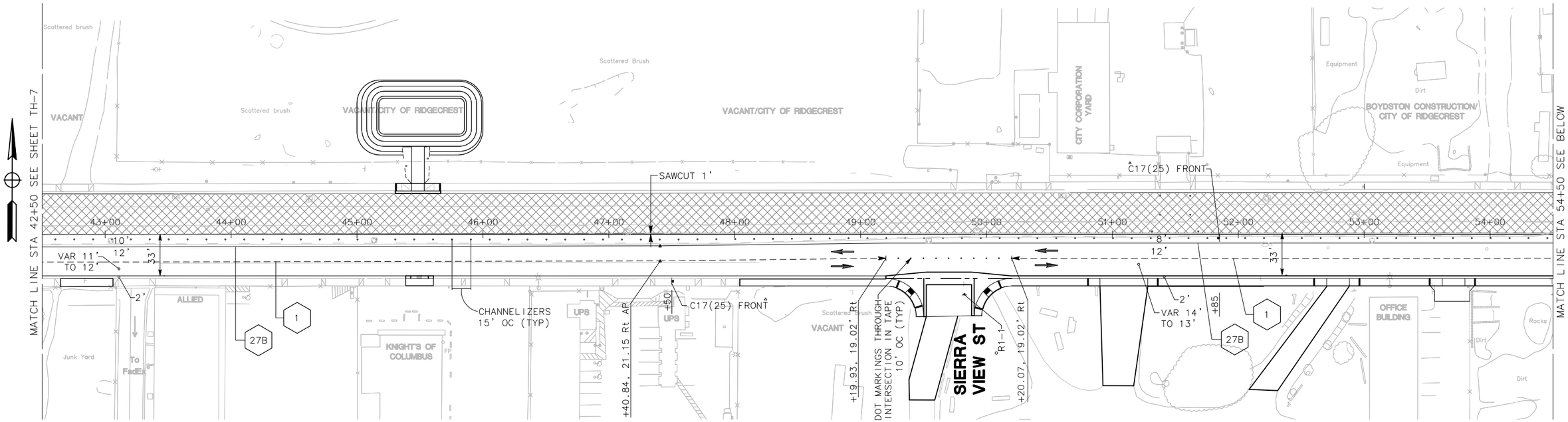

RIDGECREST BOULEVARD

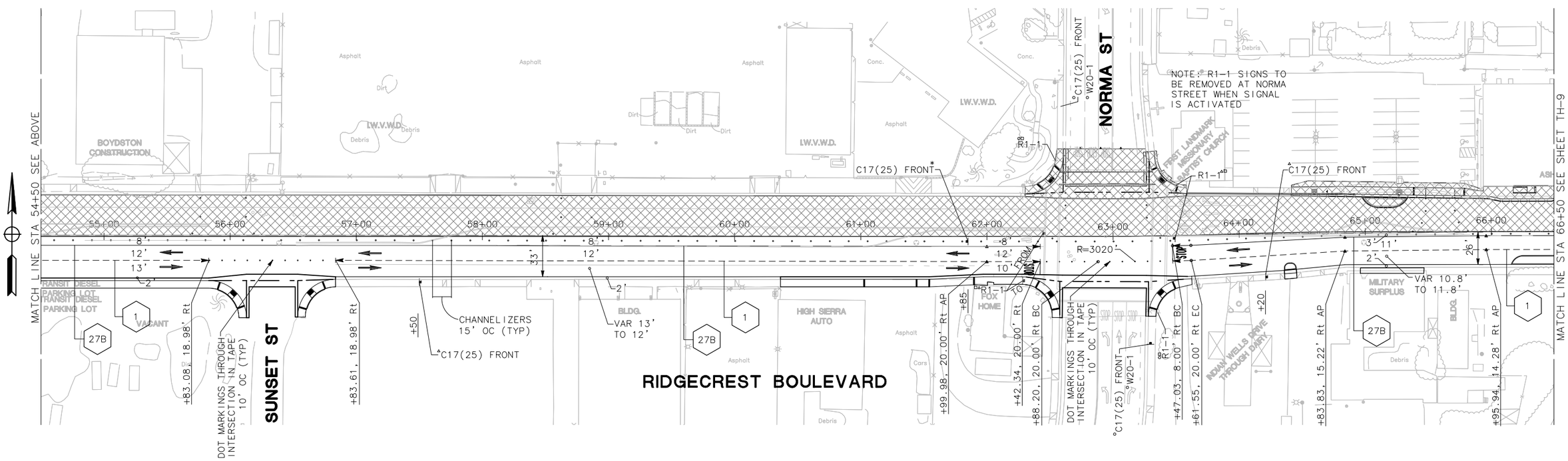

RIDGECREST BOULEVARD

SHELF-READY PLANS - NOT FOR CONSTRUCTION

THIS PLAN ACCURATE FOR TRAFFIC HANDLING ONLY.
ALL DIMENSIONS ARE IN FEET UNLESS OTHERWISE SHOWN.

Project No.	CITY OF RIDGECREST W. RIDGECREST BOULEVARD RECONSTRUCTION PROJECT TRAFFIC HANDLING - STAGE 2	REGISTERED PROFESSIONAL ENGINEER EDGAR A. NORIEGA No. 61555 Exp. 6/30/13 CIVIL STATE OF CALIFORNIA	MARK THOMAS & COMPANY, INC. 7571 N REMINGTON AVENUE, SUITE 102 FRESNO, CALIFORNIA 93720 (559) 447-1938 FAX: (559) 447-8586 WWW.MARKTHOMAS.COM MTCO JOB NUMBER: FN-09105	DATE: 11/18/2011 SCALE: 1"=40' DRAWN BY: KS/MB/JL CK'D BY: GC DATE CK'D:	Revisions	Checked By	Date Checked	SHEET NO. 58
ST0101								TH-8
								OF 90 SHEETS

PATH: V:\Ridgecrest - FN-09105 - Ridgecrest Blvd\CADD\Drawing\ FILE NAME: RCB_TH2-6-TH2-10 PLOT DATE: Jan 31, 2012-03:19:55pm CAD USER: ksmith

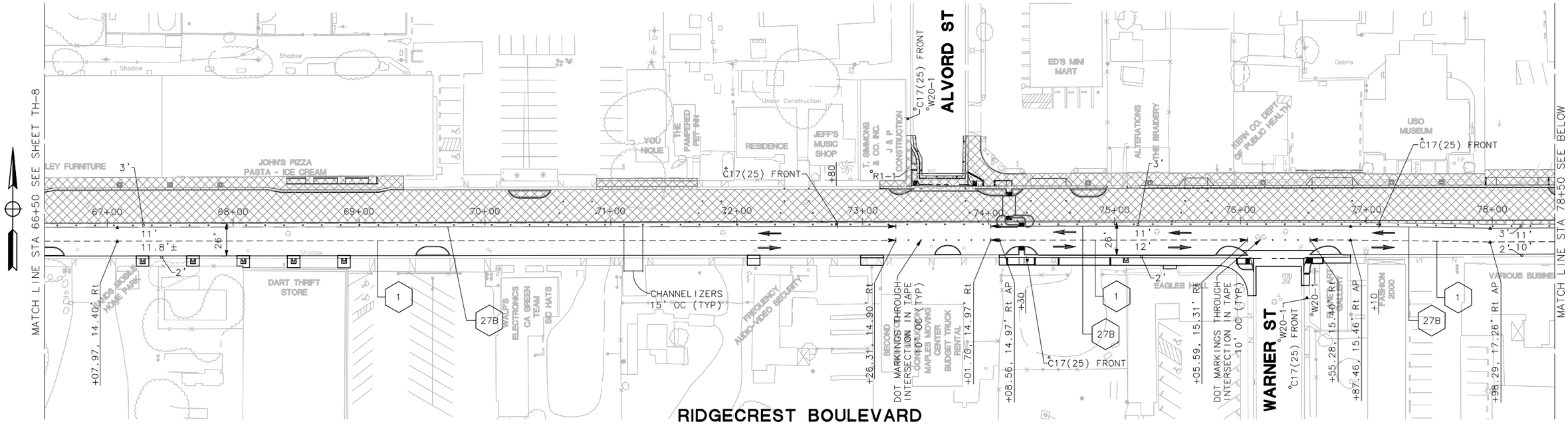

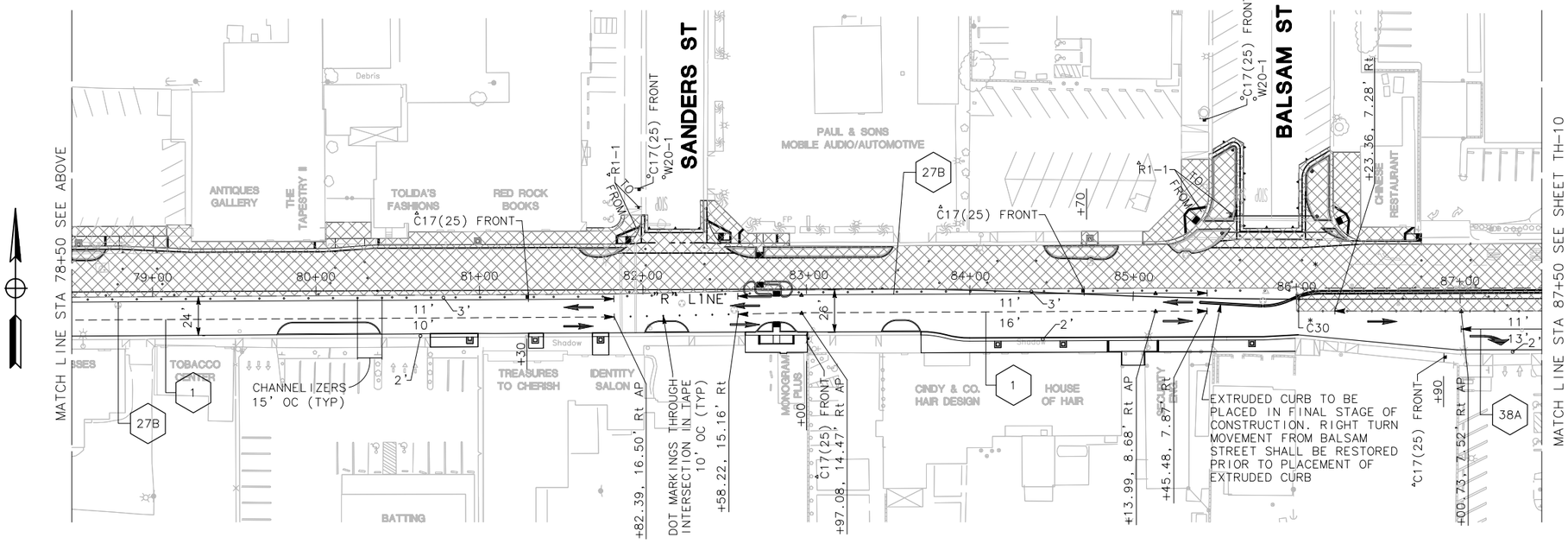

SHELF-READY PLANS - NOT FOR CONSTRUCTION

THIS PLAN ACCURATE FOR TRAFFIC HANDLING ONLY.
ALL DIMENSIONS ARE IN FEET UNLESS OTHERWISE SHOWN.

Project No.	
ST0101	CITY OF RIDGECREST W. RIDGECREST BOULEVARD RECONSTRUCTION PROJECT TRAFFIC HANDLING - STAGE 2

REGISTERED PROFESSIONAL ENGINEER — EDGAR A. NORIEGA — No. 61555 — Exp. 6/30/13 — CIVIL — STATE OF CALIFORNIA

MARK THOMAS & COMPANY, INC.
7571 N REMINGTON AVENUE, SUITE 102
FRESNO, CALIFORNIA 93720
(559) 447-1938 FAX: (559) 447-8586
WWW.MARKTHOMAS.COM
MTCO JOB NUMBER: FN-09105

DATE:	11/18/2011
SCALE:	1"=40'
DRAWN BY:	KS/MB/JL
CK'D BY:	CG
DATE CK'D:	

Revisions	Checked By	Date Checked

SHEET NO. 59

TH-9

OF 90 SHEETS

PATH: V:\Ridgecrest - FN-09105 - Ridgecrest Blvd\CADD\Drawing\
FILE NAME: RCB_TH2-6-TH2-10
PLOT DATE: Jan 31, 2012-03:20:00pm
CAD USER: ksmith

NOTE:

1. REFER TO CALTRANS STANDARD PLAN T10 FOR TRAFFIC CONTROL ON SR178.
2. SIGN LOCATIONS TO BE APPROVED BY THE ENGINEER.

CONSTRUCTION AREA SIGNS								
SIGN	SIGN CODE		PANEL SIZE	SIGN MESSAGE	DIRECTIONAL ARROW	TEXT SIZE	NO. OF POST & SIZE	NO. OF SIGNS
	FEDERAL	CALIFORNIA	(IN)			(IN)	(IN)	
A	W20-1	C23(CA)	36 x 36	ROAD WORK AHEAD		STANDARD	1 - 4x4(S)	3
B		CUSTOM	60 x 30	RIDGECREST BLVD W-BND CLOSED AHEAD		4 X 3	2 - 4x4(S)	3
C		CUSTOM	60 x 30	USE FRENCH AVE DETOUR AHEAD		4 X 3	2 - 4x4(S)	3
D	M4-10L		48 x 18	DETOUR	LEFT	STANDARD	1 - 4x4(S)	2
E	M4-10R		48 x 18	DETOUR	RIGHT	STANDARD	1 - 4x4(S)	2
F		SC3(CA)	36 x 12	DETOUR	UPWARD	STANDARD	1 - 4x4(S)	4
G	M4-8a		24 x 18	END DETOUR		STANDARD	1 - 4x4(S)	1

NOTES:

1. LOCATIONS OF CONSTRUCTION AREA SIGNS SHOWN ARE APPROXIMATE. EXACT LOCATIONS WILL BE DETERMINED BY ENGINEER.
2. (S) DENOTES STATIONARY MOUNTED SIGN(S).
3. SEE SHEET THQ-1 FOR GRAPHIC SIGN LEGEND.

① PLACE SIGN MID BLOCK

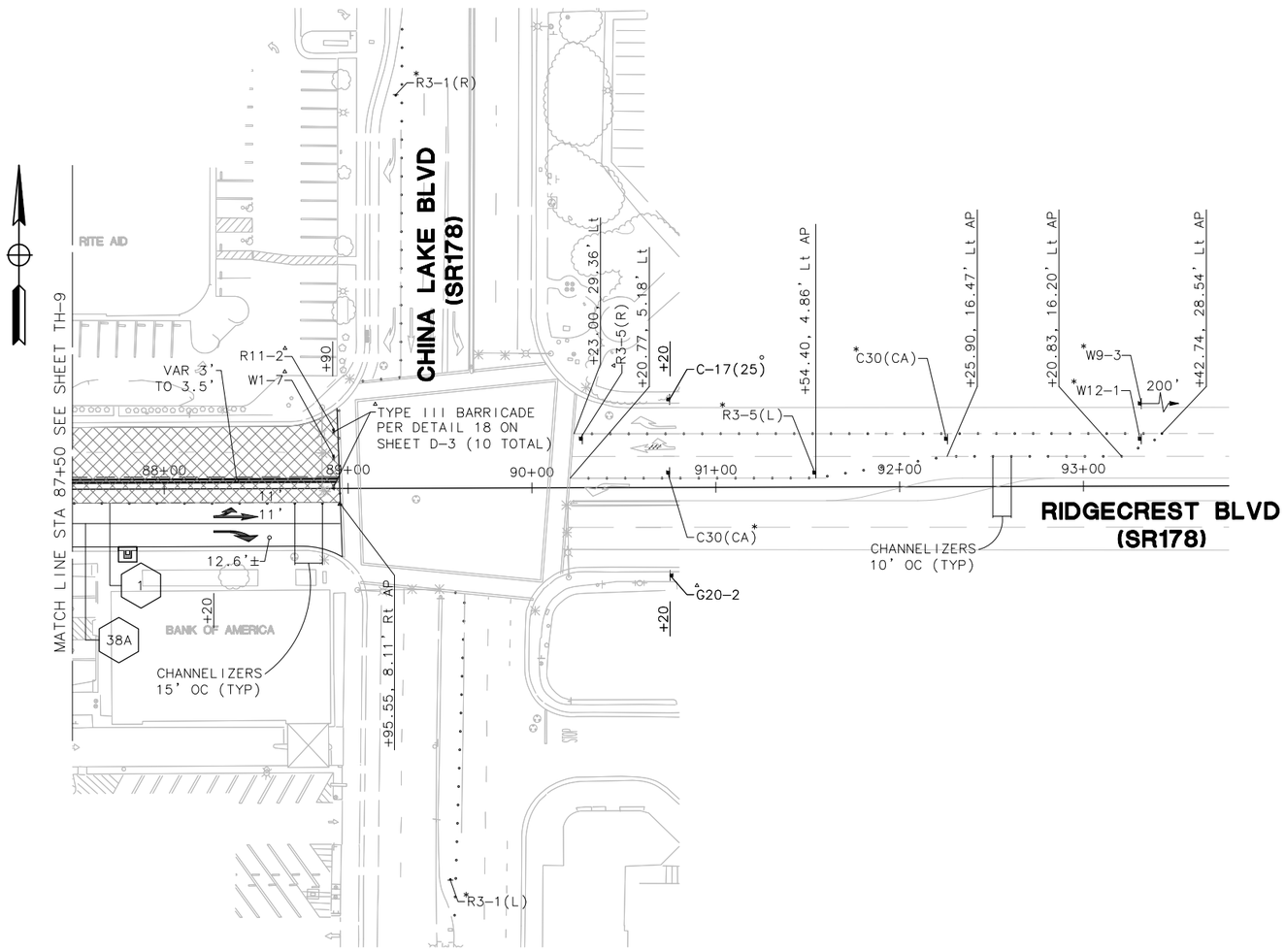

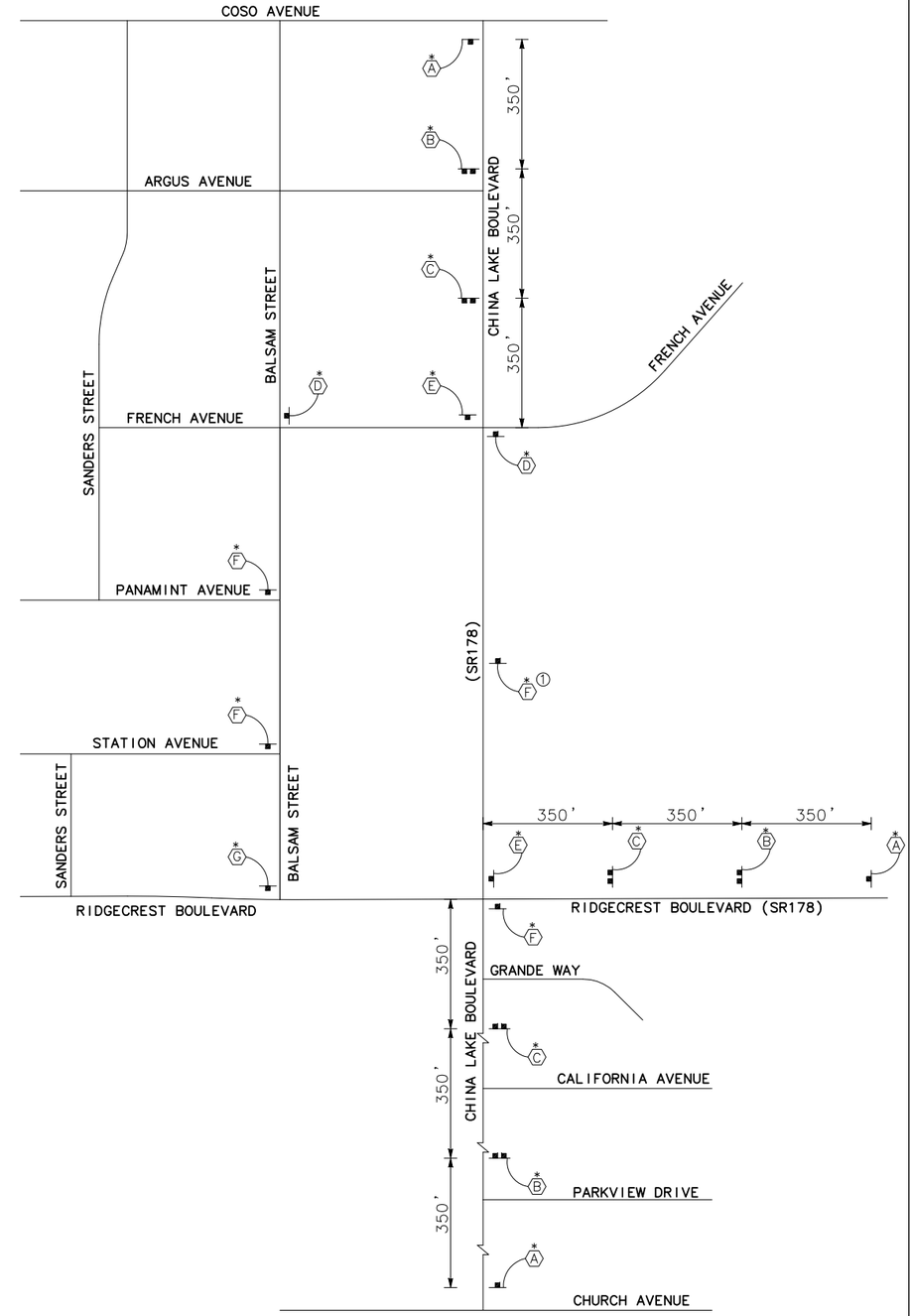

DETOUR PLAN

NTS

SHELF-READY PLANS - NOT FOR CONSTRUCTION

THIS PLAN ACCURATE FOR TRAFFIC HANDLING ONLY.
ALL DIMENSIONS ARE IN FEET UNLESS OTHERWISE SHOWN.

Project No.	
ST0101	CITY OF RIDGECREST W. RIDGECREST BOULEVARD RECONSTRUCTION PROJECT TRAFFIC HANDLING - STAGE 2

REGISTERED PROFESSIONAL ENGINEER EDGAR A. NORIEGA No. 61555 Exp. 6/30/13 CIVIL STATE OF CALIFORNIA

MARK THOMAS & COMPANY, INC.
7571 N REMINGTON AVENUE, SUITE 102
FRESNO, CALIFORNIA 93720
(559) 447-1938 FAX: (559) 447-8586
WWW.MARKTHOMAS.COM
MTCO JOB NUMBER: FN-09105

DATE: 11/18/2011
SCALE: 1"=40'
DRAWN BY: KS/MB/JL
CK'D BY: GC
DATE CK'D:

Revisions	Checked By	Date Checked

SHEET NO. 60

TH-10

OF 90 SHEETS

PATH: V:\Ridgecrest - FN-09105 - Ridgecrest Blvd\CADD\Drawing\
FILE NAME: RCB_TH2-6-TH2-10
PLOT DATE: Jan 31, 2012-03:20:03pm
CAD USER: ksmith

TRAFFIC HANDLING SIGN QUANTITIES

SIGN CODE	STAGE 1							STAGE 2						
	EXISTING SIGNS			CONSTRUCTION AREA SIGNS				EXISTING SIGNS			CONSTRUCTION AREA SIGNS			
	RELOCATE ROADSIDE SIGN	REMOVE ROADSIDE SIGN	SIGN TO REMAIN	PLACE SIGN	RELOCATE SIGN	REMOVE SIGN	SIGN TO REMAIN	RELOCATE ROADSIDE SIGN	REMOVE ROADSIDE SIGN	SIGN TO REMAIN	PLACE SIGN	RELOCATE SIGN	REMOVE SIGN	SIGN TO REMAIN
	EA							EA						
R1-1	2		16					5	4	10		4	4	
R1-2				1										
R1-2a				1										
R1-5(R)				1										
R3-1(R)											1			
R3-1(L)											1			
R3-5(R)				1								1		
R3-5(L)											1			
R11-2				3								1		
C17(25)				30							5	15		15
C30											1			
SC3				1							2	1		
W1-7				1								1		
W3-5a				1										1
W9-3											1			
W12-1											1			
W20-1				15							2	1		14
W20-5				1										
G20-2				2							1	1		1
M4-10(L)				1							1	1		
M4-10(R)				1								1		
M4-8a				1								1		
TYPE III BARRICADE				20								20		
CUSTOM 1											3			
CUSTOM 2											3			
CHANGEABLE MESSAGE SIGN				1										
TOTAL	2	0	16	82	0	0	0	5	4	10	23	48	4	31

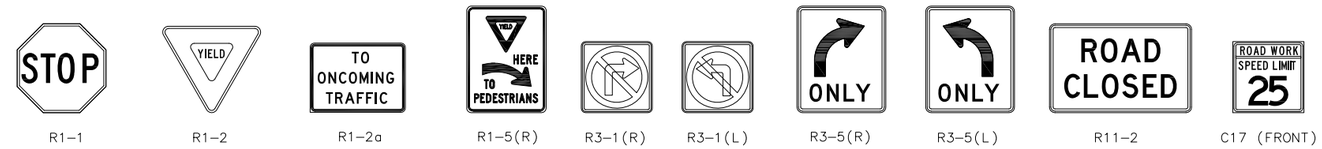

R1-1 R1-2 R1-2a R1-5(R) R3-1(R) R3-1(L) R3-5(R) R3-5(L) R11-2 C17 (FRONT)

REGULATORY SIGNS

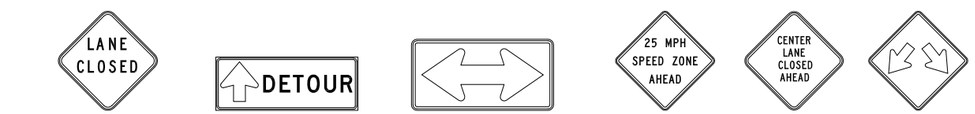

C30(CA) SC3(CA) W1-7 W3-5a W9-3 W12-1

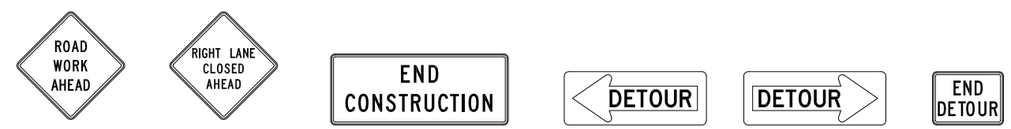

W20-1 W20-5 G20-2 M4-10(L) M4-10(R) M4-8A

WARNING SIGNS

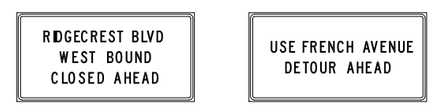

CUSTOM 1 CUSTOM 2

CUSTOM SIGNS

SHELF-READY PLANS - NOT FOR CONSTRUCTION

Project No.						
ST0101	CITY OF RIDGECREST W. RIDGECREST BOULEVARD RECONSTRUCTION PROJECT TRAFFIC HANDLING QUANTITIES	REGISTERED PROFESSIONAL ENGINEER EDGAR A. NORIEGA No. 61555 Exp. 6/30/13 CIVIL STATE OF CALIFORNIA	MARK THOMAS & COMPANY, INC. 7571 N REMINGTON AVENUE, SUITE 102 FRESNO, CALIFORNIA 93720 (559) 447-1938 FAX: (559) 447-8586 WWW.MARKTHOMAS.COM MTCO JOB NUMBER: FN-09105	DATE: 11/18/2011 SCALE: DRAWN BY: KS/MB/JL CK'D BY: CC DATE CK'D:	Revisions	Checked By / Date Checked	SHEET NO. 61 THQ-1 OF 90 SHEETS

CAD USER: ksmith
PLOT DATE: Jan 31, 2012-03:20:07pm
FILE NAME: RCB_THQ1
PATH: V:\Ridgecrest - FN-09105 - Ridgecrest Blvd\CADD\Drawing\

STRIPING LEGEND

- (XW) 12" THICK WHITE STRIPE
- (#) DENOTES DETAIL NUMBER PER CALTRANS STD PLANS
- (#) DENOTES EXISTING DETAIL NUMBER PER CALTRANS STD PLANS
- BIKE LANE LEGEND (SEE DETAIL THIS SHEET)
- STOP "STOP" LEGEND PER CALTRANS STD PLAN A-24D
- CHANGE IN TRAFFIC STRIPE
- (A) 12" THICK WHITE LIMIT LINE
- △ ANGLE POINT
- ○ BC/EC OF CURVE
- ▲ EXISTING SIGN TO BE RELOCATED
- ● EXISTING SIGN TO REMAIN
- ■ EXISTING SIGN TO BE RESET
- (R) EXISTING SIGN TO BE REMOVED
- * INSTALL ROADSIDE SIGN
- SNS STREET NAME SIGNS
- TYPE IV ARROW (THERMOPLASTIC PAVEMENT MARKING)
- TYPE VII ARROW (THERMOPLASTIC PAVEMENT MARKING)
- TYPE VI ARROW (THERMOPLASTIC PAVEMENT MARKING)
- CURB WITH TWO COATS RED PAINT
- EXISTING SINGLE POST ROADSIDE SIGN
- PROPOSED SINGLE POST ROADSIDE SIGN
- EXISTING DOUBLE POST ROADSIDE SIGN
- PROPOSED DOUBLE POST ROADSIDE SIGN
- (1) CURVE TABLE NUMBER (SEE CURVE TABLE ON RESPECTIVE SHEET)
- /// REMOVE EXISTING STRIPING AND MARKING

NOTES

1. CROSSWALKS TO BE 10' WIDE ON CENTER UNLESS OTHERWISE NOTED.
2. ALL STOP SIGNS TO REMAIN AT INTERSECTIONS UNTIL TRAFFIC SIGNALS ARE IN OPERATION.

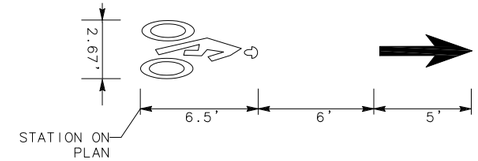

BIKE LANE LEGEND DETAIL

NTS

SEE CALTRANS STD PLANS A-24A AND A-24C FOR PAVEMENT MARKING ARROW AND BIKE LANE SYMBOL

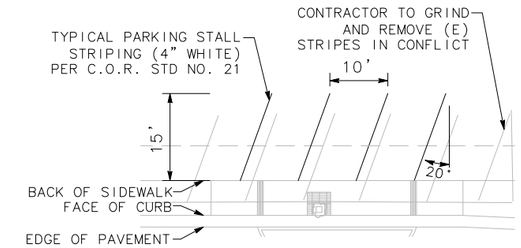

DETAIL "A"

NTS

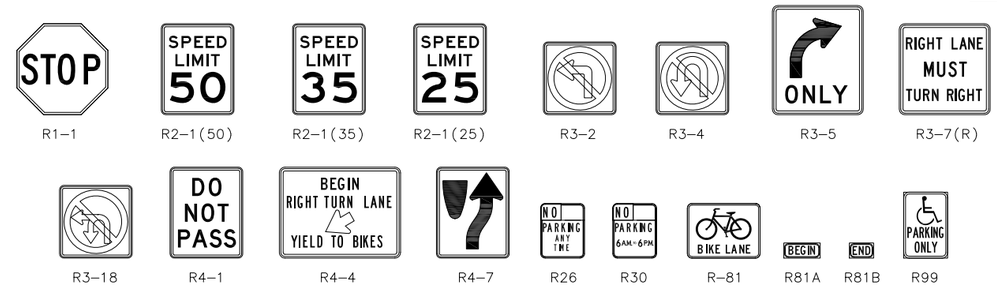

REGULATORY SIGNS

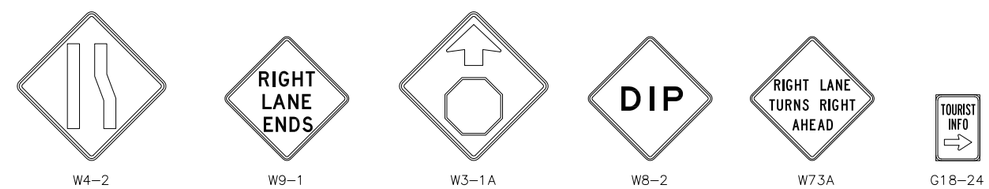

WARNING SIGNS

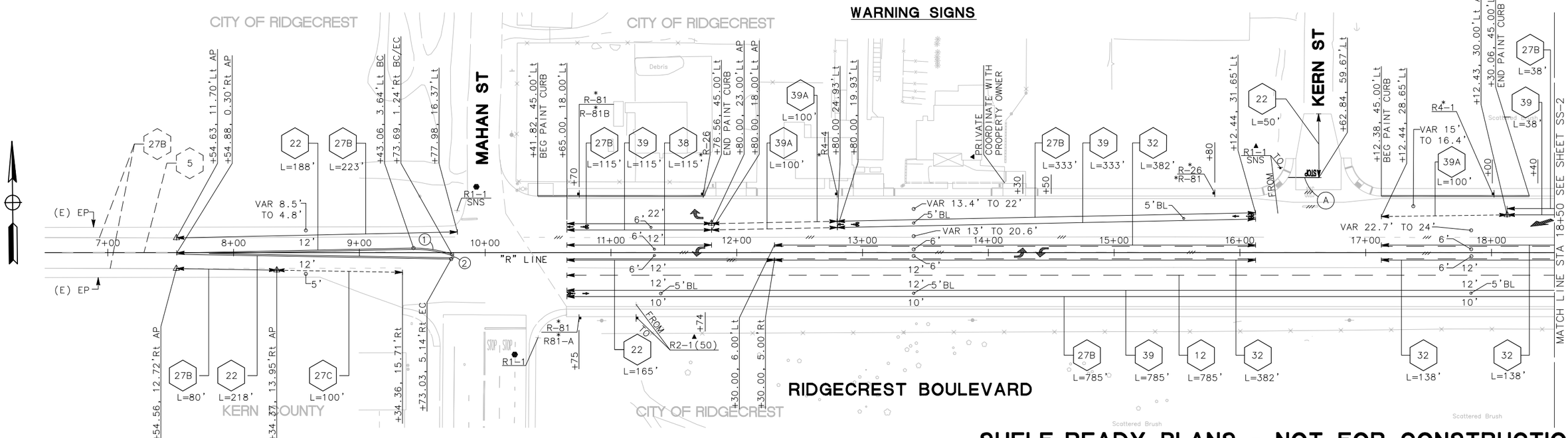

SHELF-READY PLANS - NOT FOR CONSTRUCTION

CURVE TABLE				
○	RADIUS	△	TANGENT	LENGTH
1	99.95'	17°50'50"	15.69'	31.13'
2	2.00'	163°02'06"	13.41'	5.69'

Project No.	
ST0101	CITY OF RIDGECREST W. RIDGECREST BOULEVARD RECONSTRUCTION PROJECT SIGNING AND STRIPING

REGISTERED PROFESSIONAL ENGINEER — EDGAR A. NORIEGA — No. 61555 — Exp. 6/30/13 — CIVIL — STATE OF CALIFORNIA

MARK THOMAS & COMPANY, INC.
7571 N REMINGTON AVENUE, SUITE 102
FRESNO, CALIFORNIA 93720
(559) 447-1938 FAX: (559) 447-8586
WWW.MARKTHOMAS.COM
MTCO JOB NUMBER: FN-09105

DATE: 11/18/2011
SCALE: 1"= 40'
DRAWN BY: KS/MB/JL
CK'D BY: CG
DATE CK'D:

Revisions	Checked By	Date Checked	SHEET NO. 62
			SS-1
			OF 90 SHEETS

CAD USER: ksmith
PLOT DATE: Jan 31, 2012-03:20:15pm
FILE NAME: RCB_SS-1-SS-4
PATH: V:\Ridgecrest - FN-09105 - Ridgecrest Blvd\CADD\Drawing\

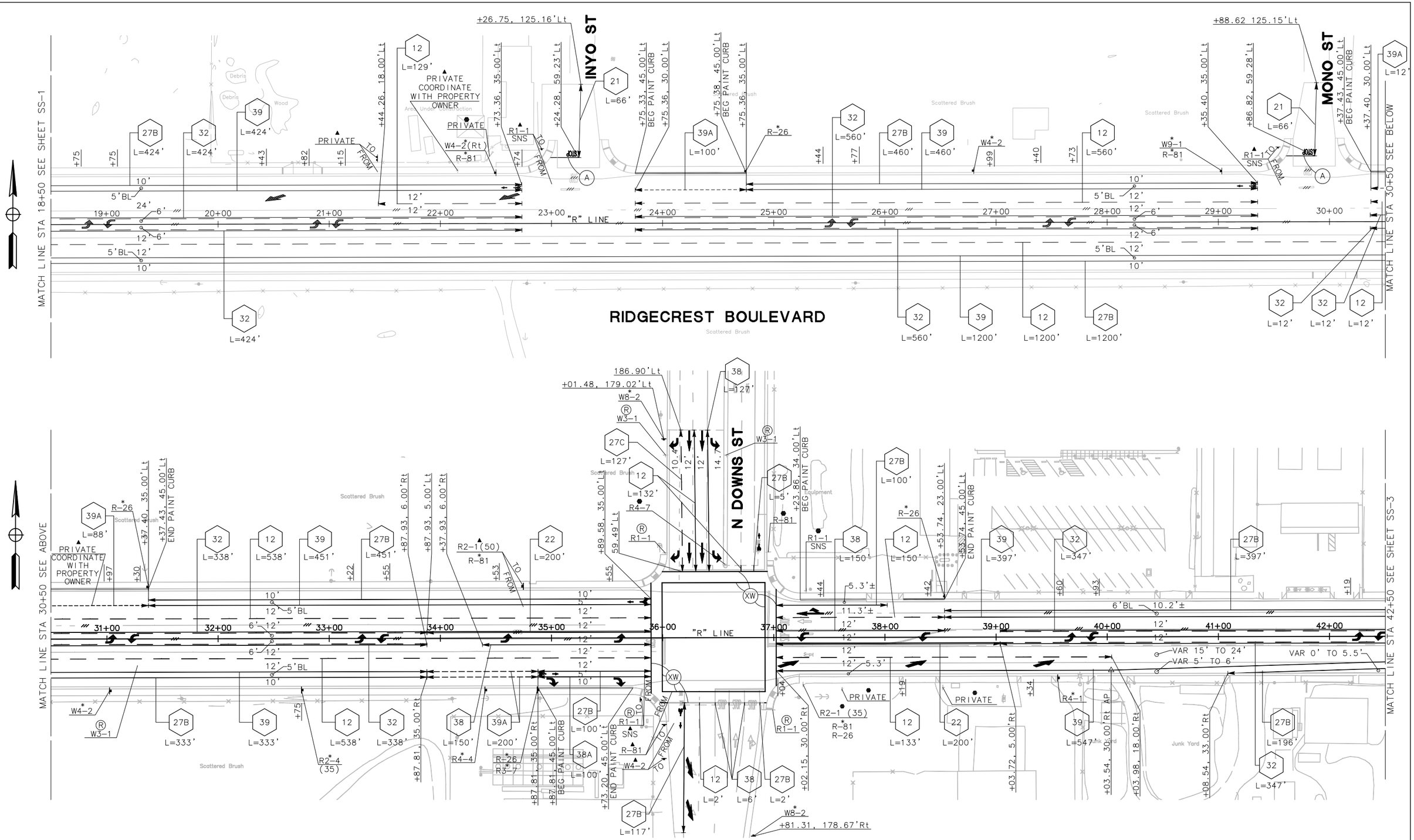

SHELF-READY PLANS - NOT FOR CONSTRUCTION

Project No.			
ST0101	CITY OF RIDGECREST W. RIDGECREST BOULEVARD RECONSTRUCTION PROJECT SIGNING AND STRIPING	REGISTERED PROFESSIONAL ENGINEER EDGAR A. NORIEGA No. 61555 Exp. 6/30/13 CIVIL STATE OF CALIFORNIA	MARK THOMAS & COMPANY, INC. 7571 N REMINGTON AVENUE, SUITE 102 FRESNO, CALIFORNIA 93720 (559) 447-1938 FAX: (559) 447-8586 WWW.MARKTHOMAS.COM MTCO JOB NUMBER: FN-09105

DATE:	11/18/2011
SCALE:	1" = 40'
DRAWN BY:	KS/MB/JL
CK'D BY:	CC
DATE CK'D:	

Revisions	Checked By	Date Checked	SHEET NO. 63
			SS-2
			OF 90 SHEETS

PATH: V:\Ridgecrest - FN-09105 - Ridgecrest Blvd\CADD\Drawing\ FILE NAME: RCB_SS-1-SS-4 PLOT DATE: Jan 31, 2012-03:20:21pm CAD USER: ksmith

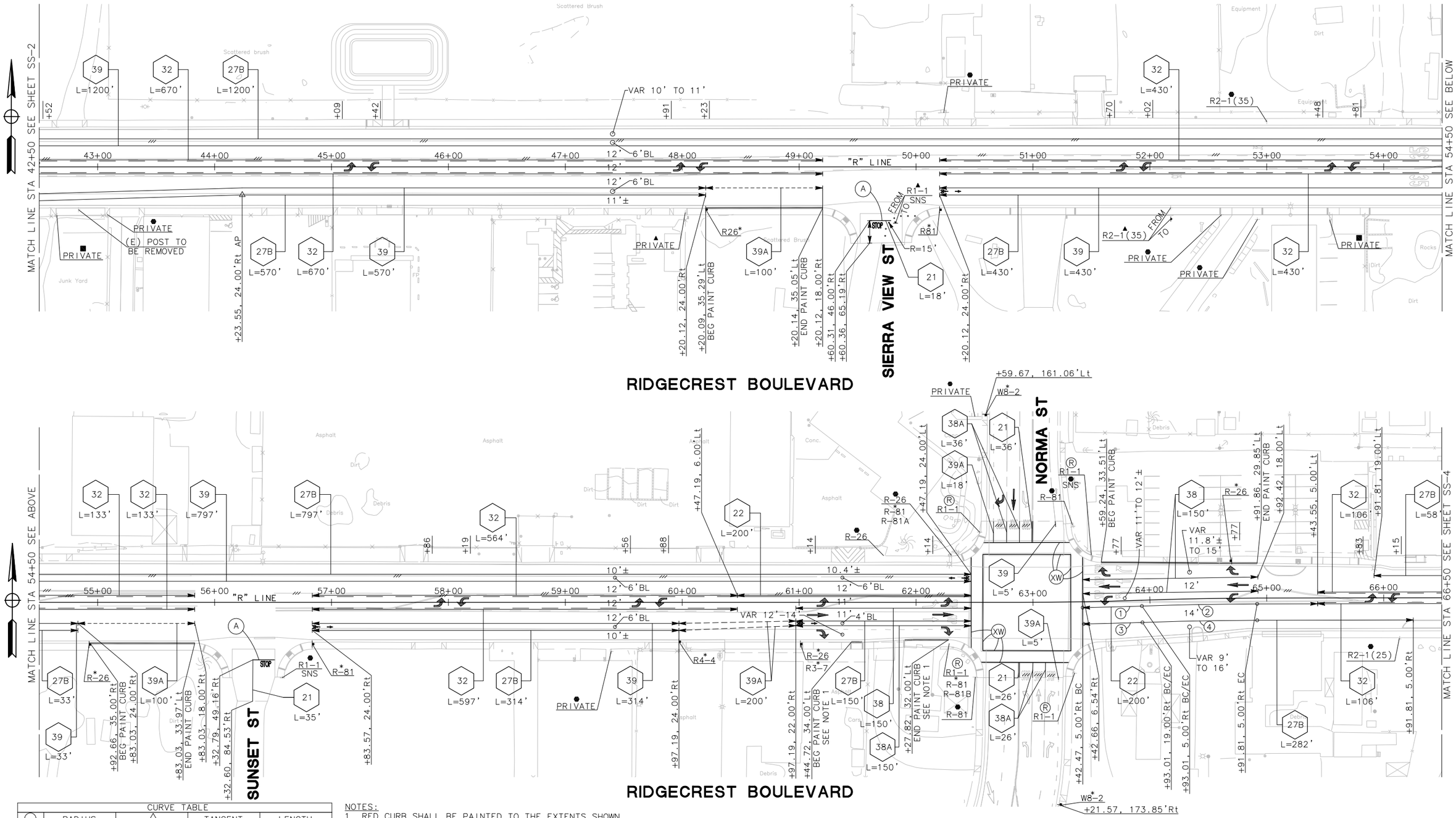

CURVE TABLE				
◯	RADIUS	△	TANGENT	LENGTH
1	3005.00'	00°57'55"	25.31'	50.62'
2	2995.00'	1°53'13"	49.69'	98.64'
3	3019.00'	00°58'10"	24.65'	51.08'
4	2981.00'	1°53'13"	49.09'	98.18'

NOTES:
1. RED CURB SHALL BE PAINTED TO THE EXTENTS SHOWN AND SHALL EXCLUDE DRIVEWAY AND RAMP AREAS.

SHELF-READY PLANS - NOT FOR CONSTRUCTION

Project No.	
ST0101	CITY OF RIDGECREST W. RIDGECREST BOULEVARD RECONSTRUCTION PROJECT SIGNING AND STRIPING

REGISTERED PROFESSIONAL ENGINEER
EDGAR A. NORIEGA
No. 61555
Exp. 6/30/13
CIVIL
STATE OF CALIFORNIA

MARK THOMAS & COMPANY, INC.
7571 N REMINGTON AVENUE, SUITE 102
FRESNO, CALIFORNIA 93720
(559) 447-1938 FAX: (559) 447-8586
WWW.MARKTHOMAS.COM
MTCO JOB NUMBER: FN-09105

DATE: 11/18/2011
SCALE: 1" = 40'
DRAWN BY: KS/MB/JL
CK'D BY: CC
DATE CK'D:

Revisions	Checked By	Date Checked	SHEET NO. 64
			SS-3
			OF 90 SHEETS

CAD USER: ksmith
PLOT DATE: Jan 31, 2012-03:20:23pm
FILE NAME: RCB_SS-1-SS-4
PATH: V:\Ridgecrest - FN-09105 - Ridgecrest Blvd\CADD\Drawing\

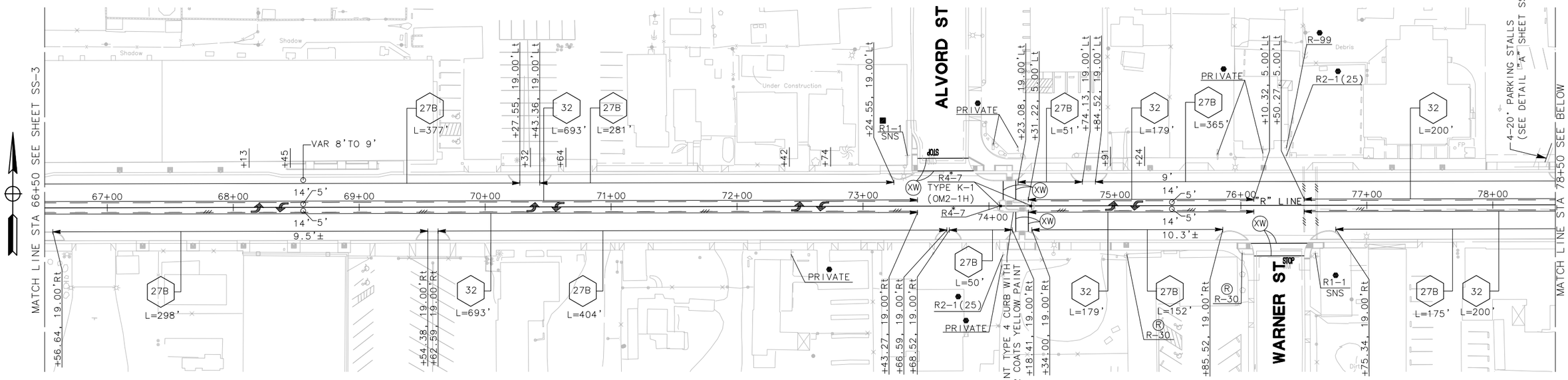

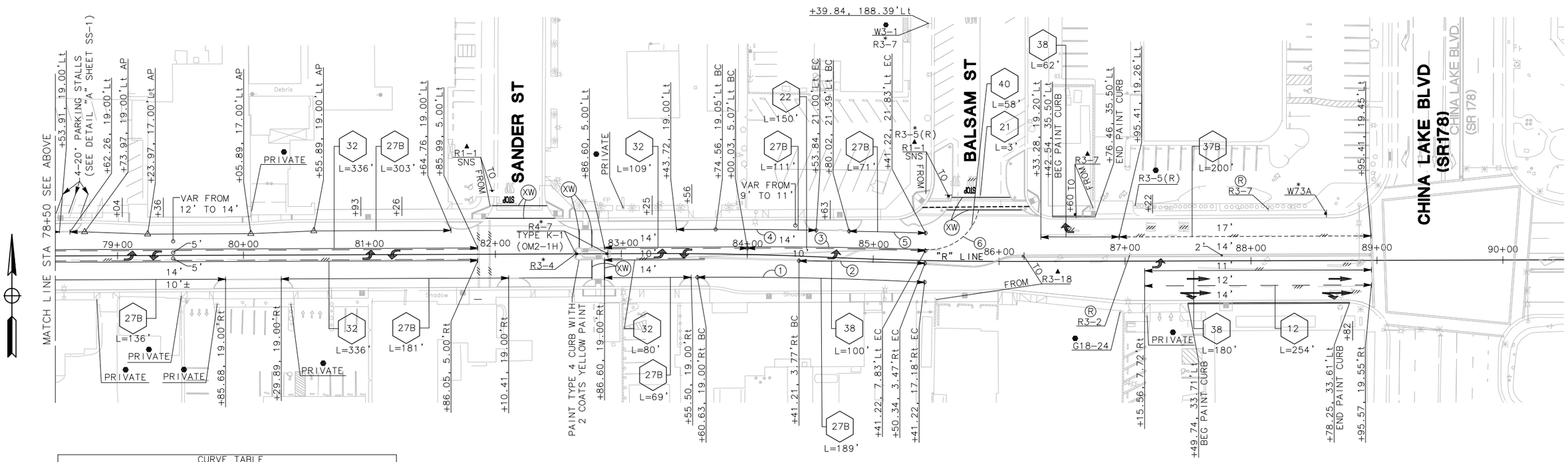

CURVE TABLE				
○	RADIUS	△	TANGENT	LENGTH
1	3019.16'	3°25'23"	90.21'	180.37'
2	3816.78'	1°30'04"	50.00'	100.00'
3	3827.78'	2°06'49"	70.61'	141.21'
4	3024.00'	1°30'45"	39.91'	79.83'
5	3731.57'	0°55'59"	30.38'	60.77'
6	40.00'	79°36'17"	33.33'	55.58'

SHELF-READY PLANS - NOT FOR CONSTRUCTION

Project No.			
ST0101	CITY OF RIDGECREST W. RIDGECREST BOULEVARD RECONSTRUCTION PROJECT SIGNING AND STRIPING	REGISTERED PROFESSIONAL ENGINEER EDGAR A. NORIEGA No. 61555 Exp. 6/30/13 CIVIL STATE OF CALIFORNIA	MARK THOMAS & COMPANY, INC. 7571 N REMINGTON AVENUE, SUITE 102 FRESNO, CALIFORNIA 93720 (559) 447-1938 FAX: (559) 447-8586 WWW.MARKTHOMAS.COM MTCO JOB NUMBER: FN-09105

DATE: 11/18/2011
SCALE: 1" = 40'
DRAWN BY: KS/MB/JL
CK'D BY: GC
DATE CK'D:

Revisions	Checked By	Date Checked	SHEET NO. 65
			SS-4
			OF 90 SHEETS

PATH: V:\Ridgecrest - FN-09105 - Ridgecrest Blvd\CADD\Drawing\ FILE NAME: RCB_SS-1-SS-4 PLOT DATE: Jan 31, 2012-03:20:26pm CAD USER: ksmith

PAVEMENT DELINEATION & DELINEATORS

DETAIL No.		THERMOPLASTIC TRAFFIC STRIPE													PAVEMENT MARKER RETRO-REFLECTIVE		THERMOPLASTIC PAVEMENT MARKING	
		12	21	22	27B	27C	32	37B	38	38A	39	39A	40					
SHEET No.	LOCATION	4" WHITE	4" YELLOW	4" YELLOW	4" WHITE	4" WHITE	4" YELLOW	8" WHITE	8" WHITE	8" WHITE	6" WHITE	6" WHITE	4" WHITE	PAINT RED CURB	TYPE D	TYPE G	ARROWS, WORDS & SYMBOLS	12" LIMIT LINE, & 12" CROSS WALK
		LF	LF	LF	LF	LF	LF	LF	LF	LF	LF	LF	LF	LF	EA	EA	FT²	FT²
SS-1	STA 07+50 – 18+50	785		621	1638	100	1040		115	115	1156	300		250	128	21	208	25
SS-2	STA 18+50 – 42+50	3424	126	400	3738	136	3362		449	100	3722	400		382	300	90	674	809
SS-3	STA 42+50 – 66+50		104	400	3834		3839		300	201	3359	433		370	313	13	398	631
SS-4	STA 66+50 – 90+50	254	56	150	3213		3005	200	342				58	162	232	19	370	494
TOTAL		4463	*572	*3142	12423	236	*22492	200	1206	416	8237	1133	58	1164	973	143	1650	1959

*NOTE: IF DOUBLE YELLOW, TOTAL WAS MULTIPLIED BY A FACTOR OF 2.

SHELF-READY PLANS - NOT FOR CONSTRUCTION

Project No.	
ST0101	CITY OF RIDGECREST W. RIDGECREST BOULEVARD RECONSTRUCTION PROJECT PAVEMENT DELINEATION QUANTITIES

RECORDED PROFESSIONAL ENGINEER
EDGAR A. NORIEGA
No. 61555
Exp. 6/30/13
CIVIL
STATE OF CALIFORNIA

MARK THOMAS & COMPANY, INC.
7571 N REMINGTON AVENUE, SUITE 102
FRESNO, CALIFORNIA 93720
(559) 447-1938 FAX: (559) 447-8586
WWW.MARKTHOMAS.COM
MTCO JOB NUMBER: FN-09105

DATE: 11/18/2011
SCALE:
DRAWN BY: KS/MB/JL
CK'D BY: GC
DATE CK'D:

Revisions	Checked By	Date Checked

SHEET NO. 66

PDQ-1

OF 90 SHEETS

CAD USER: ksmith
PLOT DATE: Jan 31, 2012-03:20:29pm
FILE NAME: RCB_PDQ-1
PATH: V:\Ridgecrest - FN-09105 - Ridgecrest Blvd\CADD\Drawing\

REMOVE CONCRETE (SIDEWALK, DRIVEWAY, AND PARKING LOT)

STATION LIMITS	AREA
	SF
36+93.85 LT TO 37+83.43 LT	574
41+74.37 RT TO 42+21.22 RT	263
42+64.35 RT TO 43+06.82 RT	260
45+30.48 LT TO 45+66.48 LT	219
45+38.77 RT TO 45+60.67 RT	129
53+04.16 RT TO 53+84.59 RT	486
53+55.76 RT TO 53+83.34 RT	489
56+53.61 RT TO 56+83.57 RT	320
60+36.37 RT TO 62+57.73 RT	1296
62+30.40 LT TO 62+60.57 LT	318
63+27.21 RT TO 63+61.60 RT	240
63+28.89 LT TO 63+59.19 LT	233
64+35.38 RT TO 64+45.03 RT	42
64+41.99 LT TO 69+35.37 LT	3549
64+96.13 RT TO 65+46.35 RT	242
67+23.00 RT TO 67+33.00 RT	60
67+63.00 RT TO 67+73.00 RT	60
68+03.00 RT TO 68+13.00 RT	66
68+43.00 RT TO 68+53.00 RT	72
68+83.00 RT TO 68+93.00 RT	74
70+88.62 LT TO 71+68.62 LT	395
72+08.35 RT TO 72+18.34 RT	54
72+98.26 LT TO 73+16.42 LT	110
73+13.68 LT TO 73+38.11 LT	231
73+84.08 LT TO 74+96.06 LT	1295
74+08.46 RT TO 76+10.29 RT	1130
75+10.09 LT TO 81+99.23 LT	4690
76+50.32 RT TO 76+87.46 RT	247
80+69.82 RT TO 80+99.00 RT	174
81+69.00 RT TO 81+79.00 RT	112
82+39.36 LT TO 82+89.76 LT	397
82+62.50 RT TO 83+00.50 RT	224
83+70.44 RT TO 85+99.17 RT	2464
84+67.00 LT TO 84+77.05 LT	63
85+04.75 LT TO 85+44.46 LT	990
86+22.68 LT TO 86+74.46 LT	1088
TOTAL	22656

REMOVE CONCRETE (CURB & GUTTER)

STATION LIMITS	LENGTH
	LF
36+04.18 LT TO 36+04.43 LT	111
36+92.90 LT TO 37+48.86 LT	46
36+93.85 RT TO 37+83.43 RT	152
45+30.48 LT TO 45+66.48 LT	37
45+38.77 RT TO 45+60.67 RT	22
53+04.16 RT TO 53+84.59 RT	80
56+53.61 RT TO 56+83.57 RT	47
60+36.37 RT TO 62+57.73 RT	239
62+30.40 LT TO 62+60.57 LT	52
63+27.21 RT TO 63+61.60 RT	51
63+28.89 LT TO 63+59.19 LT	50
64+35.38 RT TO 64+45.03 RT	10
64+41.99 LT TO 69+35.37 LT	494
73+13.68 LT TO 73+38.11 LT	63
73+84.08 LT TO 74+94.06 LT	137
74+08.46 RT TO 76+10.29 RT	223
75+10.09 LT TO 81+99.23 LT	713
76+50.32 RT TO 76+87.46 RT	55
80+69.82 RT TO 80+99.00 RT	29
82+39.36 LT TO 82+89.76 LT	63
82+62.50 RT TO 83+00.50 RT	38
83+70.44 RT TO 85+99.17 RT	229
85+04.75 LT TO 85+44.46 LT	77
86+22.68 LT TO 86+76.46 LT	101
TOTAL	3119

*TREEWELL REMOVAL CURB & GUTTER

STATION LIMITS	LENGTH
	LF
67+23.00 RT TO 67+33.00 RT	10
67+63.00 RT TO 67+73.00 RT	10
68+03.00 RT TO 68+13.00 RT	10
68+43.00 RT TO 68+53.00 RT	10
68+83.00 RT TO 68+93.00 RT	10
81+69.00 RT TO 81+79.00 RT	10
84+67.00 LT TO 84+77.05 LT	10
87+75.00 RT TO 87+85.00 RT	10
TOTAL	80

*ONLY TREEWELLS THAT HAVE NOT ALREADY BEEN INCLUDED IN EXTENTS OF REMOVE CONCRETE (CURB & GUTTER)

SHELF-READY PLANS - NOT FOR CONSTRUCTION

Project No.	
ST0101	CITY OF RIDGECREST W. RIDGECREST BOULEVARD RECONSTRUCTION PROJECT QUANTITIES

RECORDED PROFESSIONAL ENGINEER
EDGAR A. NORIEGA
No. 61555
Exp. 6/30/13
CIVIL
STATE OF CALIFORNIA

MARK THOMAS & COMPANY, INC.
7571 N REMINGTON AVENUE, SUITE 102
FRESNO, CALIFORNIA 93720
(559) 447-1938 FAX: (559) 447-8586
WWW.MARKTHOMAS.COM
MTCO JOB NUMBER: FN-09105

DATE: 11/18/2011
SCALE:
DRAWN BY: KS/MB/JL
CK'D BY: GC
DATE CK'D:

Revisions	Checked By	Date Checked

SHEET NO. 67

Q-1

OF 90 SHEETS

CAD USER: ksmith
PLOT DATE: Jan 31, 2012-03:20:31pm
FILE NAME: RCB_Q-1-Q-3
PATH: V:\Ridgecrest - FN-09105 - Ridgecrest Blvd\CADD\Drawing\

CURB, GUTTER, DRIVEWAYS, AND SIDEWALKS

SHEET NO.	STATION LIMITS	LOCATION	TYPE "A" CURB AND GUTTER	TYPE "B" CURB AND GUTTER	MODIFIED CURB AND GUTTER	VALLEY GUTTER	TYPE "3" CURB	TYPE "4" & "4A" CURB	TYPE "5" CURB	SIDEWALK	TYPE "6" CURB	CONSTRUCT DRIVEWAY	STAIRS AND PEDESTRIAN RAMPS	AB (CLASS 2)	AC (MISC AREA)
			CY	CY	CY	CY	CY	CY	CY	CY	CY	CY	CY	CY	TON
L-1	9+50.00 TO 19+50.00	LT	51.1	0	0	23.7	2.2	0	0	54.8	0	18.2	0	74.7	15.0
	9+50.00 TO 19+50.00	RT	51.5	0	0	0	0	0	0	64.9	0	0	0	0	0
	L-1 SUBTOTAL		**102.6**	**0**	**0**	**23.7**	**2.2**	**0**	**0**	**119.7**	**0**	**18.2**	**0**	**74.7**	**15.0**
L-2	19+50.00 TO 29+50.00	LT	57.7	0	0	25.4	0.9	0	0	69.5	0	8.1	0	68.0	15.8
	19+50.00 TO 29+50.00	RT	58.1	0	0	0	0	0	0	73.3	0	0	0	0	0
	L-2 SUBTOTAL		**115.8**	**0**	**9.6**	**25.4**	**0.9**	**0**	**0**	**142.8**	**0**	**8.1**	**0**	**68.0**	**15.8**
L-3	29+50.00 TO 39+50.00	LT	44.8	0	0	80.0	1.5	0	0	55.4	0	0	0	253.7	0
	29+50.00 TO 39+50.00	RT	41.7	0	9.6	58.7	0.8	0	0	49.0	0	6.0	0	171.3	0
	L-3 SUBTOTAL		**86.5**	**0**	**0**	**138.7**	**2.3**	**0**	**0**	**104.4**	**0**	**6.0**	**0**	**425.0**	**0**
L-4	39+50.00 TO 49+50.00	LT	2.2	0	0	0	0	0	0	0	0	5.5	0	4.1	0
	39+50.00 TO 49+50.00	RT	10.8	0	0	6.2	0.4	0	0	18.9	0	0	0	9.4	0
	L-4 SUBTOTAL		**13.0**	**0**	**0**	**6.2**	**0.4**	**0**	**0**	**18.9**	**0**	**5.5**	**0**	**13.5**	**0**
L-5	49+50.00 TO 59+50.00	LT	0	0	0	0	0	0	0	0	0	0	10.5	0	0
	49+50.00 TO 59+50.00	RT	41.0	0	0	40.7	1.2	0	0	41.0	0	15.9	0	115.9	0
	L-5 SUBTOTAL		**41.0**	**0**	**0**	**40.7**	**1.2**	**0**	**0**	**41.0**	**0**	**15.9**	**10.5**	**115.9**	**0**
L-6	59+50.00 TO 69+50.00	LT	33.3	0	1.6	29.2	0.8	0	1.1	43.7	0	6.1	0	62.4	8.3
	59+50.00 TO 69+50.00	RT	20.5	0	0	28.2	0.8	0	2.0	21.1	3.7	9.6	0	55.5	14.5
	L-6 SUBTOTAL		**53.8**	**0**	**1.6**	**57.4**	**1.6**	**0**	**3.1**	**71.7**	**3.7**	**15.7**	**0**	**117.9**	**22.8**
L-7	69+50.00 TO 79+50.00	LT	35.9	0	6.1	12.0	1.0	0.4	4.6	52.6	0	24.6	0	25.4	21.6
	69+50.00 TO 79+50.00	RT	15.2	0	3.2	17.8	0.7	0.4	3.8	18.8	0.6	6.3	0	9.8	0
	L-7 SUBTOTAL		**51.1**	**0**	**9.3**	**29.8**	**1.7**	**0.8**	**8.4**	**71.4**	**0.6**	**30.9**	**0**	**35.2**	**21.6**
L-8	79+50.00 TO 89+50.00	LT	22.4	4.0	3.8	21.6	0	6.0	10.1	53.2	0.8	4.7	0	34.7	0
	79+50.00 TO 89+50.00	RT	15.4	0	3.1	0	0.7	1.5	4.3	24.1	0	1.9	0	3.8	1.5
	L-8 SUBTOTAL		**37.8**	**4.0**	**6.9**	**21.6**	**0.7**	**7.5**	**14.4**	**77.3**	**0.8**	**6.6**	**0**	**38.5**	**1.5**
	TOTAL		501.6	4.0	27.4	343.5	11.0	8.3	25.9	640.3	5.1	106.9	10.5	874.1	76.7
			MINOR CONCRETE =1562 CY								MINOR CONCRETE (MINOR STRUCTURE) = 122.5 CY				

SHELF-READY PLANS - NOT FOR CONSTRUCTION

Project No.	CITY OF RIDGECREST W. RIDGECREST BOULEVARD RECONSTRUCTION PROJECT QUANTITIES	RECORDED PROFESSIONAL ENGINEER EDGAR A. NORIEGA No. 61555 Exp. 6/30/13 CIVIL STATE OF CALIFORNIA	MARK THOMAS & COMPANY, INC. 7571 N REMINGTON AVENUE, SUITE 102 FRESNO, CALIFORNIA 93720 (559) 447-1938 FAX: (559) 447-8586 WWW.MARKTHOMAS.COM MTCO JOB NUMBER: FN-09105	DATE: 11/18/2011 SCALE: DRAWN BY: KS/MB/JL CK'D BY: GC DATE CK'D:	Revisions	Checked By	Date Checked	SHEET NO. 68 Q-2 OF 90 SHEETS
ST0101								

CAD USER: ksmith
PLOT DATE: Jan 31, 2012-03:20:32pm
FILE NAME: RCB_Q-1-Q-3
PATH: V:\Ridgecrest - FN-09105 - Ridgecrest Blvd\CADD\Drawing\

ADJUST VALVE TO GRADE

LOCATION	EACH
10+29.77, LT	1
16+45.65, LT	1
22+79.08, LT	1
23+07.96, LT	1
23+08.17, LT	1
23+67.76, LT	1
23+74.96, LT	1
29+69.92, LT	1
30+37.42, LT	1
36+31.25, LT	1
36+33.48, LT	1
36+34.22, LT	1
36+38.73, LT	1
36+62.45, RT	1
36+84.96, LT	1
36+89.07, LT	1
37+02.76, RT	1
37+10.94, RT	1
40+15.00, LT	1
40+37.62, LT	1
43+81.63, LT	1
49+59.00, LT	1
49+63.49, LT	1
49+65.29, RT	1
49+68.10, LT	1
50+07.71, LT	1
56+18.10, LT	1
56+26.17, LT	1
56+29.01, LT	1
56+50.91, LT	1
61+17.10, LT	1
62+33.83, LT	1
62+60.48, LT	1
62+64.90, RT	1
62+64.99, RT	1
62+66.43, RT	1
66+76.42, RT	1
68+12.03, RT	1
69+81.07, RT	1
70+02.38, RT	1
70+04.03, RT	1
72+14.84, RT	1
73+54.81, RT	1
73+80.52, RT	1
75+00.73, RT	1
76+47.40, RT	1
76+48.51, RT	1
76+48.67, RT	1
79+53.18, RT	1
82+03.51, RT	1
82+04.53, RT	1
83+04.02, RT	1
84+09.19, RT	1
85+53.53, RT	1
85+55.08, RT	1
85+56.65, RT	1
87+03.28, RT	1
87+37.85, RT	1
TOTAL	58

INSTALL BOLLARD

LOCATION	EACH
85+53.80, LT	1
85+58.82, LT	1
85+59.41, LT	1
86+09.16, LT	1
86+12.51, LT	1
86+21.05, LT	1
TOTAL	6

ADJUST MANHOLE TO GRADE

LOCATION	EACH
12+00.28, LT	1
23+38.87, LT	1
36+42.94, LT	1
38+15.56, RT	1
40+59.97, RT	1
41+42.23, RT	1
43+04.53, RT	1
45+13.49, RT	1
53+06.18, RT	1
56+38.72, RT	1
TOTAL	10

RECONSTRUCT MANHOLE

LOCATION	EACH
14+40.02, LT	1
16+76.45, LT	1
23+38.87, LT	1
30+01.13, LT	1
49+54.04, RT	1
58+90.06, RT	1
61+44.06, RT	1
64+98.97, RT	1
68+43.62, RT	1
71+88.85, RT	1
75+34.02, RT	1
76+36.00, RT	1
78+78.90, RT	1
82+24.06, RT	1
85+79.43, RT	1
TOTAL	15

RELOCATE FIRE HYDRANT

LOCATION	EACH
23+74.96, LT	1
30+35.65, LT	1
TOTAL	2

TYPE "GO" DI

LOCATION	EACH
45+46.70, RT	1
45+51.70, RT	1
TOTAL	2

18" REINFORCED CONCRETE PIPE (RCP)

LOCATION	LENGTH
	LF
45+46.70	103
45+51.70	103
TOTAL	206

RELOCATE WATER SERVICE/METER

LOCATION	EACH
13+24.05, LT	1
14+12.34, LT	1
22+79.12, LT	1
63+45.46, LT	1
79+17.18, LT	1
80+35.70, LT	1
80+79.44, LT	1
81+17.48, LT	1
81+18.53, LT	1
81+86.44, LT	1
85+48.94, RT	1
86+57.45, LT	1
TOTAL	12

ADJUST WATER METER TO GRADE

LOCATION	EACH
42+98.70, LT	1
69+29.57, LT	1
75+11.80, LT	1
76+87.31, RT	1
84+96.79, RT	1
85+06.57, RT	1
TOTAL	6

ADJUST FIRE HYDRANT TO GRADE

LOCATION	EACH
10+29.79, LT	1
16+35.46, LT	1
TOTAL	2

FENCE/GATE SUMMARY

STATION LIMITS	INSTALL FENCE PER DETAIL 16	INSTALL TYPE 'BW' FENCE	RELOCATE ROLLING GATE	RELOCATE PEDESTRIAN GATE
	LF	LF	EA	EA
11+54.56, 56.12' LT TO 12+15.86, 56.48' LT	29.0	0	1	0
13+34.70, 55.00' LT TO 14+14.14, 64.51' LT	87.3	0	0	1
53+83.84, 57.49' RT TO 53+87.50, 41.00' RT	18.4	0	0	0
45+36.84, 57.57' LT TO 45+57.63, 57.83' LT	0	20.8	0	0
TOTAL	134.7	20.8	1	1

RELOCATE WATER VALVE

LOCATION	EACH
56+44.76, RT	1
82+04.53, RT	2
TOTAL	3

ADJUST SSCO TO GRADE

LOCATION	EACH
69+30.46, LT	1
69+27.88, LT	1
TOTAL	2

RELOCATE MAILBOX

LOCATION	EACH
11+81.00, LT	1
12+90.00, LT	1
14+09.00, LT	1
48+05.00, RT	1
51+33.00, RT	1
TOTAL	5

EARTHWORK QUANTITIES

STATION LIMITS	ROADWAY EXCAVATION
	CY
RIDGECREST BLVD.	19,500

INSTALL HANDRAIL

STATION LIMITS	LENGTH
	LF
66+17.43, 30.00' LT TO 66+36.82, 30.00' LT	19.4
66+17.43, 30.00' LT TO 66+27.93, 35.75' LT	12.3
66+34.82, 34.50' LT TO 66+36.82, 35.00' LT	3.8
68+41.64, 30.00' LT TO 69+15.07, 30.00' LT	73.4
68+41.64, 35.00' LT TO 68+57.64, 36.57' LT	17.9
68+64.14, 36.51' LT TO 68+82.84, 36.64' LT	22.6
68+89.34, 36.64' LT TO 69+07.57, 36.72' LT	22.2
69+14.07, 36.72' LT TO 69+16.07, 35.00' LT	4.1
73+39.27, 28.00' LT TO 73+39.27, 41.50' LT	13.5
74+04.31, 32.50' LT TO 74+18.79, 28.00' LT	18.8
TOTAL	188.0

ROADWAY QUANTITIES

STATION LIMITS	AC (TYPE A)	CTB	AB (CLASS II)
	TON	SF	CY
10+36.64 TO 88+95.05	21,227	534,500	875

SHELF-READY PLANS - NOT FOR CONSTRUCTION

Project No.	
ST0101	CITY OF RIDGECREST W. RIDGECREST BOULEVARD RECONSTRUCTION PROJECT QUANTITIES

REGISTERED PROFESSIONAL ENGINEER — EDGAR A. NORIEGA — No. 61555 — Exp. 6/30/13 — CIVIL — STATE OF CALIFORNIA

MARK THOMAS & COMPANY, INC.
7571 N REMINGTON AVENUE, SUITE 102
FRESNO, CALIFORNIA 93720
(559) 447-1938 FAX: (559) 447-8586
WWW.MARKTHOMAS.COM
MTCO JOB NUMBER: FN-09105

DATE: 11/18/2011
SCALE:
DRAWN BY: KS/MB/JL
CK'D BY: CC
DATE CK'D:

Revisions	Checked By	Date Checked

SHEET NO. 69

Q-3

OF 90 SHEETS

CAD USER: ksmith
PLOT DATE: Jan 31, 2012-03:20:33pm
FILE NAME: RCB_Q-1-Q-3
PATH: V:\Ridgecrest - FN-09105 - Ridgecrest Blvd\CADD\Drawing\

CAD USER: janderson
PLOT DATE: Jan 26, 2012-01:21:40pm
FILE NAME: 2750-E-01-07
PATH: C:\Users\janderson\appdata\local\temp\AcPublish_7588\

TRAFFIC SIGNAL GENERAL NOTES:

1. ALL WORK SHALL CONFORM TO THE STATE OF CALIFORNIA DEPARTMENT OF TRANSPORTATION (CALTRANS) STANDARD PLANS AND STANDARD SPECIFICATIONS (2006 EDITION), CALIFORNIA MUTCD, SIGN SPECIFICATION SHEETS, AND THE SPECIAL PROVISIONS.
2. THE CONTRACTOR IS RESPONSIBLE FOR VERIFICATION OF ALL EXISTING UNDERGROUND UTILITIES, WHETHER OR NOT THEY ARE SHOWN ON THESE PLANS. THE CONTRACTOR SHALL CONTACT USA (800-642-2444) AT LEAST 48 HOURS BEFORE BEGINNING WORK. WHERE MARKINGS ARE NEAR PROPOSED FOUNDATIONS, THE CONTRACTOR SHALL LOCATE UNDERGROUND UTILITIES BY POT HOLING PRIOR TO EXCAVATING.
3. INSPECTION SHALL BE BY THE CITY OF RIDGECREST DEPARTMENT OF PUBLIC WORKS. ALL REQUESTS FOR INSPECTION SHALL BE MADE AT LEAST 24 HOURS IN ADVANCE OF THE PROPOSED CONSTRUCTION.
4. THE CONTRACTOR SHALL PROVIDE SAFE AND CONTINUOUS PASSAGE FOR LOCAL PEDESTRIAN AND VEHICULAR TRAFFIC AT ALL TIMES.
5. ALL PULL BOXES SHALL BE #5 UNLESS OTHERWISE INDICATED ON THE PLANS OR APPROVED BY THE ENGINEER.
6. ALL SIGNAL HEADS AND BACK PLATES SHALL BE METAL AND ALL VISORS SHALL BE TUNNEL TYPE. ALL LENSES SHALL BE LED TYPE INCLUDING PEDESTRIAN INDICATIONS.
7. THE CONTRACTOR SHALL REMOVE AND TRANSPORT ALL SALVAGED EQUIPMENT AND SIGNS, AND DELIVER TO CITY YARD.
8. ALL VEHICLE HEAD LENSES SHALL BE 12".
9. ALL CONDUIT WITHIN THE ROADWAY SHALL BE INSTALLED AT A DEPTH OF 42 INCHES.

INDEX OF ELECTRICAL PLANS

E-1 – NOTES, LEGEND, AND DETAILS
E-2 THRU E-7 – TRAFFIC SIGNAL PLAN
E-8 THRU E-13 – LIGHTING PLAN

ABBREVIATIONS

SCE – SOUTHERN CALIFORNIA EDISON
MLC – MICRO LOOP LEAD-IN CABLE

LEGEND

PROPOSED EXISTING

– VIDEO DETECTION ZONE
C-X – POST-TOP DECORATIVE LUMINAIRE
C-X – CALTRANS TYPE 15 LUMINAIRE (SEE CALTRANS STANDARD PLAN RSP ES-6A)
– LUMINAIRE ON WOOD POLE
LIGHTING CIRCUIT DESIGNATION (TYPICAL)
– MAGNETIC VEHICLE DETECTOR

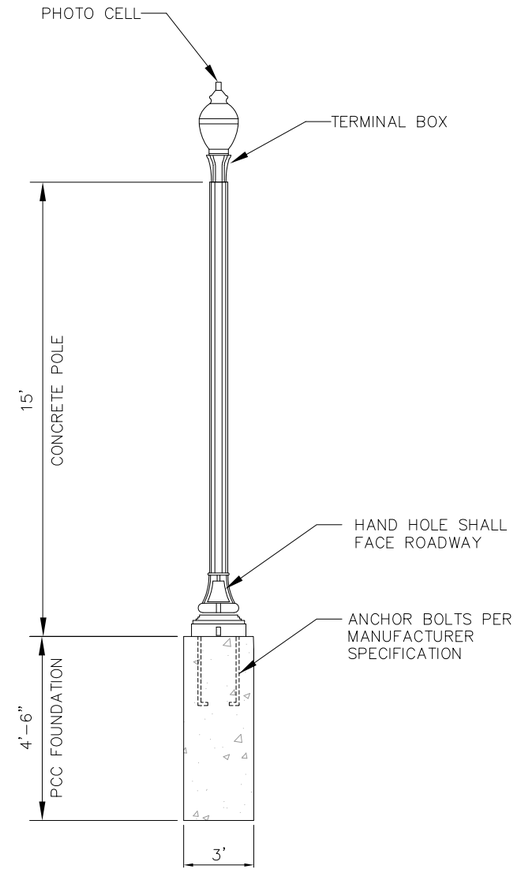

DECORATIVE LUMINAIRE

NOT TO SCALE

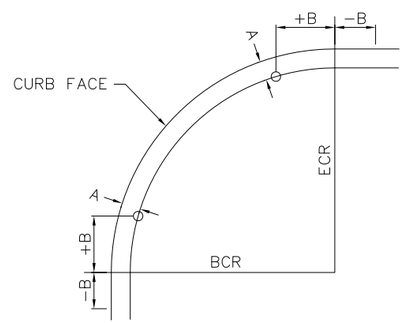

POLE LOCATION

NOT TO SCALE

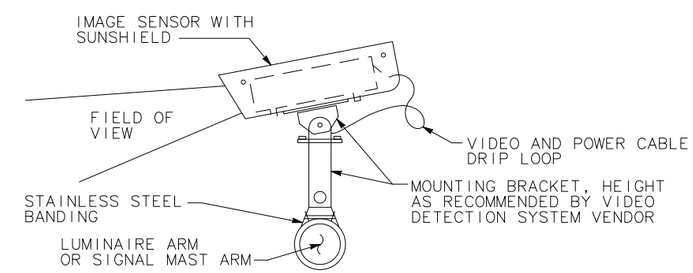

VIDEO DETECTION CAMERA MOUNTING DETAIL

NOT TO SCALE

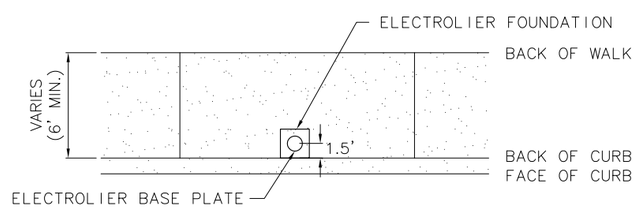

TYPICAL DECORATIVE LUMINAIRE PLACEMENT

NOT TO SCALE

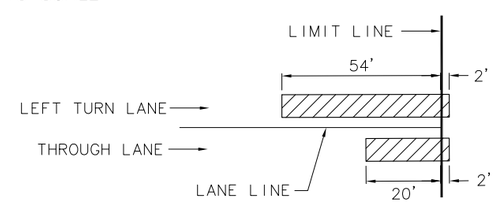

TYPICAL VIDEO DETECTION ZONE LAYOUT

NOT TO SCALE

JOB NO.							
ST0101	CITY OF RIDGECREST W. RIDGECREST BOULEVARD RECONSTRUCTION NOTES, LEGEND, AND DETAILS	REGISTERED PROFESSIONAL ENGINEER RUSTIN D. OKLA No. 62461 Exp. 9/30/13 CIVIL STATE OF CALIFORNIA	FEHR & PEERS TRANSPORTATION CONSULTANTS 2990 Lava Ridge Court Suite 200 Roseville, CA 95661 (916) 773-1900 Walnut Creek, CA · Roseville, CA · San Jose, CA · San Francisco, CA · Riverside, CA · Seattle, WA · Orange County, CA · Los Angeles County, CA · Salt Lake City, UT · Reno, NV · Denver, CO · San Diego, CA	DATE: 12/12/11 SCALE: NONE DRAWN BY: JJA CK'D BY: KC DATE CK'D: 12/9/11	Revisions	Checked By	Date Checked	SHEET NO. 70 E-1 OF 90 SHEETS

PROJECT NOTES (THIS SHEET ONLY):

1. FURNISH AND INSTALL MODEL 170E CONTROLLER IN MODEL 332 CABINET WITH CONTRACTOR–FURNISHED BATTERY BACKUP SYSTEM (SEE SPECIAL PROVISIONS).
2. FURNISH AND INSTALL TYPE III–BF (120/240 V) SERVICE EQUIPMENT ENCLOSURE WITH THE FOLLOWING BREAKERS:
   - 2P–100A MAIN
   - 1P–50A (120 V) TRAFFIC SIGNAL
   - 2P–30A (240 V) INTERSECTION LIGHTING
   - 1P–15A (120 V) PEC

   INSTALL TYPE V PEC FOR INTERSECTION LIGHTING.
3. INSTALL 13'x5'x4" P.C.C. PAD.
4. FURNISH AND INSTALL VIDEO DETECTION CAMERA PER SPECIAL PROVISIONS AND DETAIL ON SHEET E–1.
5. INSTALL SIGN ON SIGNAL MAST ARM.
6. 2"C, 2#6 (CONTROLLER).
7. 2"C, 2#8 (LIGHTING), 2#8 (FLASHING BEACON).
8. INSTALL 3"C, WITH PULL ROPE PER SCE REQUIREMENTS.
9. 1 1/2"C, 1 SIC.
10. 2"C, 2#8 (FLASHING BEACON).

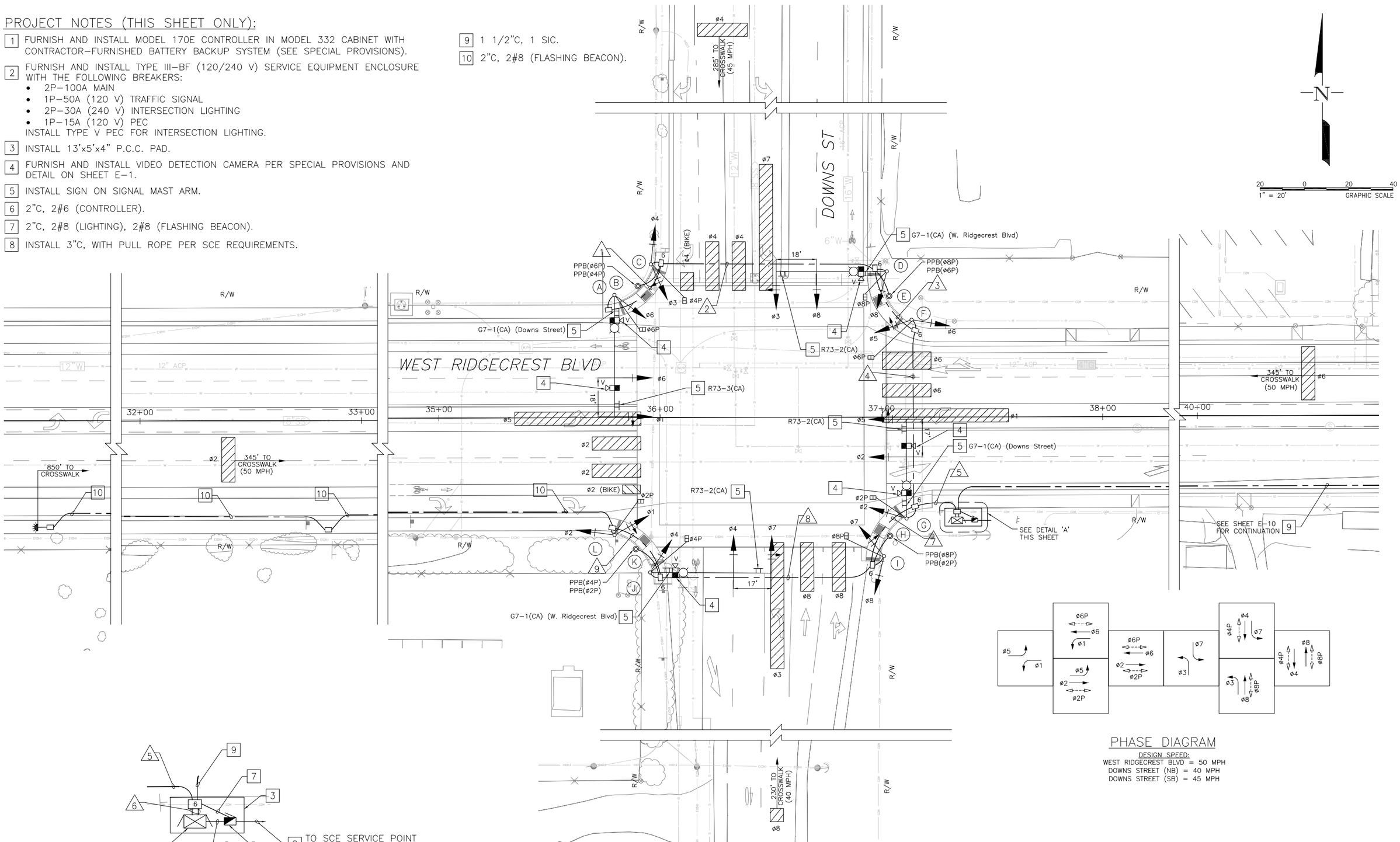

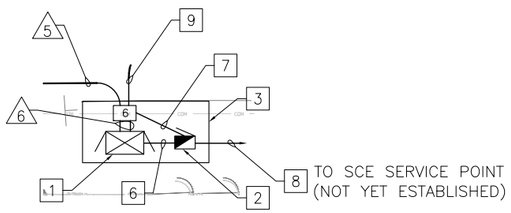

DETAIL 'A'
NO SCALE

PHASE DIAGRAM

DESIGN SPEED:
WEST RIDGECREST BLVD = 50 MPH
DOWNS STREET (NB) = 40 MPH
DOWNS STREET (SB) = 45 MPH

JOB NO.	CITY OF RIDGECREST W. RIDGECREST BOULEVARD RECONSTRUCTION TRAFFIC SIGNAL PLAN	REGISTERED PROFESSIONAL ENGINEER RUSTIN D. CRUZ No. 62461 Exp. 9/30/13 CIVIL STATE OF CALIFORNIA	FEHR & PEERS TRANSPORTATION CONSULTANTS	DATE: 12/12/11 SCALE: 1"=20' DRAWN BY: JJA CK'D BY: KC DATE CK'D: 12/9/11	Revisions	Checked By	Date Checked	SHEET NO. 71
ST0101			2990 Lava Ridge Court Suite 200 Roseville, CA 95661 (916) 773-1900 Walnut Creek, CA · Roseville, CA · San Jose, CA · San Francisco, CA · Riverside, CA · Seattle, WA · Orange County, CA · Los Angeles County, CA · Salt Lake City, UT · Reno, NV · Denver, CO · San Diego, CA					E-2 OF 90 SHEETS

CAD USER: janderson
PLOT DATE: Jan 26, 2012-01:21:47pm
FILE NAME: 2750-E-01-07
PATH: C:\Users\janderson\appdata\local\temp\AcPublish_7588\

CONDUCTOR SCHEDULE

CABLE TYPE	STD	PHASE	1	2	3	4	5	6	7	8	9
			NUMBER OF CONDUCTORS / RUN NUMBER								
VEH–PED 12CSC	Ⓐ	1,6,6P	1	1	1	1	1	1			
	Ⓑ	6P,4P		2	2	2	2	2			
	Ⓒ	3,4,4P		1	1	1	1	1			
	Ⓓ	3,8,8P			1	1	1	1			
	Ⓔ	8P,6P			2	2	2	2			
	Ⓕ	5,6,6P				1	1	1			
	Ⓖ	2,5,2P					1	1			
	Ⓗ	2P,8P					2	2	2		
	Ⓘ	7,8,8P					1	1	1		
	Ⓙ	4,7,4P					1	1	1	1	
	Ⓚ	4P,2P					2	2	2	2	
PPB 3CSC	Ⓛ	1,2,2P					1	1	1	1	1
TOTAL CABLES 12/3 CONDUCTORS			1 –	2 2	3 4	4 4	8 8	8 8	3 4	2 2	1 –
#8	LIGHTING		2	2	2	2	2	–	2	2	–
#8	FLASHING BEACON		–	–	–	–	2	–	2	2	2
CAMERA CABLE			2	2	3	3	6	6	1	1	–
SIGNAL INTERCONNECT CABLE								1			
CONDUIT SIZE			3"	3"	2–3"	2–3"	2–4"	2–4"	2–3"	3"	2"
PERCENT FILL			16	24	19	21	25	24	15	22	15

EQUIPMENT SCHEDULE

STANDARD LOC	STANDARD TYPE	SIG. MA (FEET)	LUM. MA (FEET)	PLACEMENT DIMENSIONS "A"	PLACEMENT DIMENSIONS "B"	SIGNAL MOUNTING MAST ARM VEHICLE	SIGNAL MOUNTING POLE VEHICLE	SIGNAL MOUNTING POLE PEDESTRIAN	PED PUSH BUTTONS Ø	PED PUSH BUTTONS ARROW	PED PUSH BUTTONS QUAD	HPS LUMINAIRE WATTAGE	STANDARD MAST ARM MOUNTED STREET NAME SIGN	COMMENTS
Ⓐ	29–5–100	55'	15'	9.8'	5.3'	MAT MAS	SV–1–T	SP–1–T	–	–	–	250W	Downs Street	INSTALL R73–3(CA) ON SIGNAL MAST ARM.
Ⓑ	PPB POST	–	–	7.8'	CENTER	–	–	–	4 6	← →	EAST SOUTH	–		
Ⓒ	1–B	–	–	7.5'	5.5'	–	TV–2–T	SP–1–T	–	–	–	–		
Ⓓ	29–5–100	50'	15'	8.2'	–5.1'	MAT MAS	SV–1–T	SP–1–T	–	–	–	250W	W. Ridgecrest Blvd	INSTALL R73–2(CA) ON SIGNAL MAST ARM.
Ⓔ	PPB POST	–	–	7.8'	5.7'	–	–	–	6 8	← →	SOUTH WEST	–		
Ⓕ	1–B	–	–	6.5'	7.0'	–	TV–2–T	SP–1–T	–	–	–	–		
Ⓖ	26–4–100	45'	15'	7.6'	11.6'	MAT MAS	SV–1–T	SP–1–T	–	–	–	250W	Downs Street	INSTALL R73–2(CA) ON SIGNAL MAST ARM.
Ⓗ	PPB POST	–	–	7.8'	CENTER	–	–	–	8 2	← →	WEST NORTH	–		
Ⓘ	1–B	–	–	8.0'	2.2'	–	TV–2–T	SP–1–T	–	–	–	–		
Ⓙ	29–5–100	55'	15'	7.3'	5.2'	MAT MAS	SV–1–T	SP–1–T	–	–	–	250W	W. Ridgecrest Blvd	INSTALL R73–2(CA) ON SIGNAL MAST ARM.
Ⓚ	PPB POST	–	–	7.8'	CENTER	–	–	–	2 4	← →	NORTH EAST			
Ⓛ	1–B	–	–	7.2'	6.2'	–	TV–2–T	SP–1–T	–	–	–	–		

JOB NO.								
ST0101	CITY OF RIDGECREST W. RIDGECREST BOULEVARD RECONSTRUCTION TRAFFIC SIGNAL PLAN	REGISTERED PROFESSIONAL ENGINEER RUSTIN D. CALLA No. 62461 Exp. 9/30/13 CIVIL STATE OF CALIFORNIA	FEHR & PEERS TRANSPORTATION CONSULTANTS	2990 Lava Ridge Court Suite 200 Roseville, CA 95661 (916) 773-1900 Walnut Creek, CA · Roseville, CA · San Jose, CA · San Francisco, CA · Riverside, CA · Seattle, WA · Orange County, CA · Los Angeles County, CA · Salt Lake City, UT · Reno, NV · Denver, CO · San Diego, CA	DATE: 12/12/11 SCALE: NONE DRAWN BY: JJA CK'D BY: KC DATE CK'D: 12/9/11	Revisions	Checked By	Date Checked	SHEET NO. 72 E-3 OF 90 SHEETS

CAD USER: janderson
PLOT DATE: Jan 26, 2012-01:21:48pm
FILE NAME: 2750-E-01-07
PATH: C:\Users\janderson\appdata\local\temp\AcPublish_7588\

PROJECT NOTES (THIS SHEET ONLY):

1. FURNISH AND INSTALL MODEL 170E CONTROLLER IN MODEL 332 CABINET WITH CONTRACTOR-FURNISHED BATTERY BACKUP SYSTEM (SEE SPECIAL PROVISIONS).
2. FURNISH AND INSTALL TYPE III-BF 120/240 V SERVICE EQUIPMENT ENCLOSURE WITH THE FOLLOWING BREAKERS:
   - 2P-100A MAIN
   - 1P-50A (120 V) TRAFFIC SIGNAL
   - 2P-30A (240 V) INTERSECTION LIGHTING
   - 1P-15A (120 V) PEC

   INSTALL TYPE V PEC FOR INTERSECTION LIGHTING.
3. INSTALL 13'x5'x4" P.C.C. PAD.
4. FURNISH AND INSTALL VIDEO DETECTION CAMERA PER SPECIAL PROVISIONS AND DETAIL ON SHEET E-1.
5. INSTALL SIGN ON SIGNAL MAST ARM.
6. 2"C, 2#6 (CONTROLLER).
7. 2"C, 2#8 (LIGHTING).
8. INSTALL 3"C, WITH PULL ROPE PER SCE REQUIREMENTS.
9. 1 1/2"C, 1 SIC.

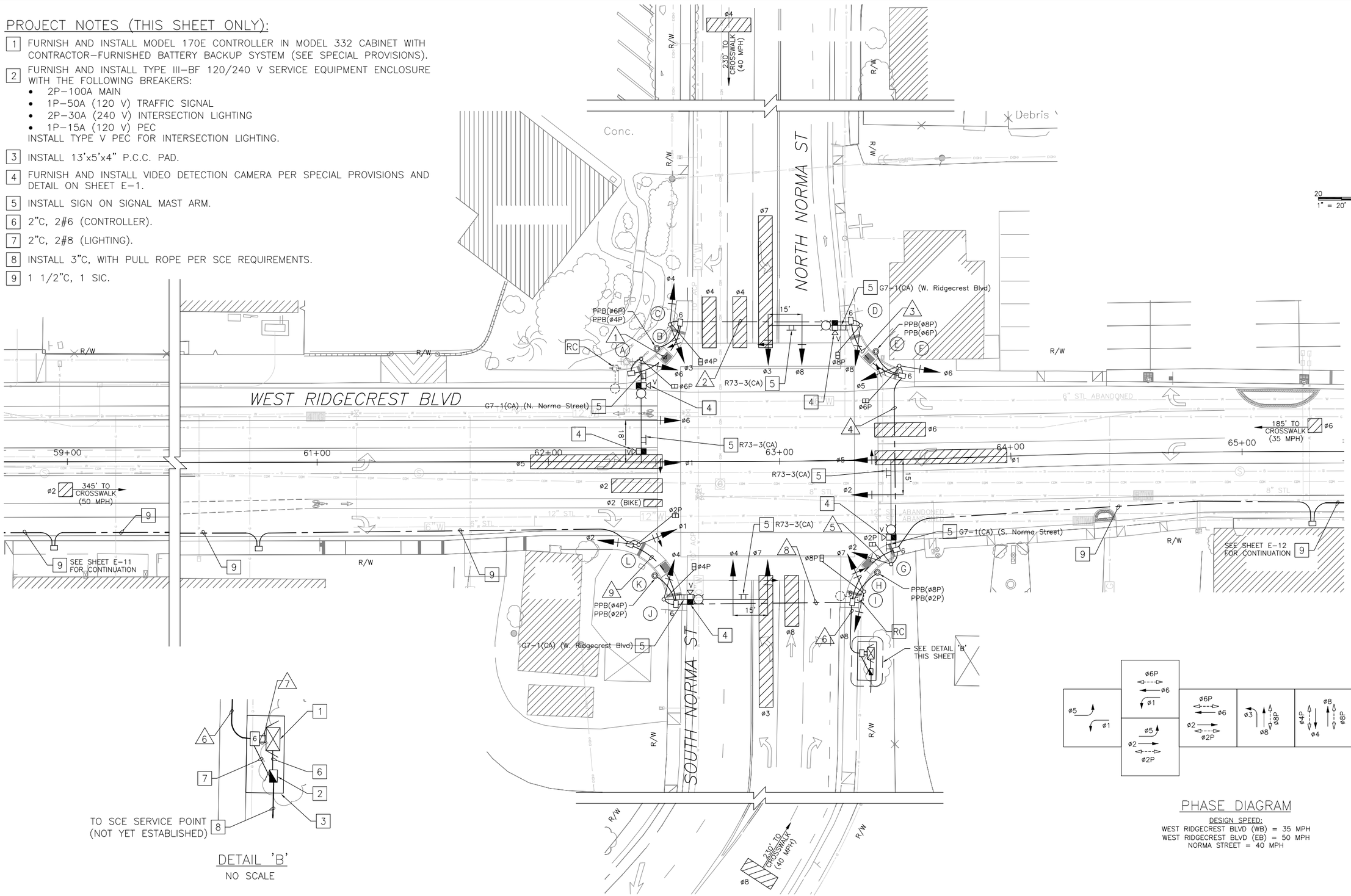

DETAIL 'B'
NO SCALE

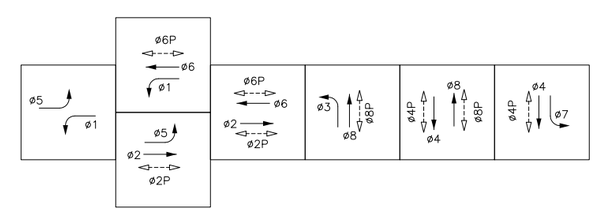

PHASE DIAGRAM

DESIGN SPEED:
WEST RIDGECREST BLVD (WB) = 35 MPH
WEST RIDGECREST BLVD (EB) = 50 MPH
NORMA STREET = 40 MPH

JOB NO.						
ST0101	CITY OF RIDGECREST W. RIDGECREST BOULEVARD RECONSTRUCTION TRAFFIC SIGNAL PLAN	REGISTERED PROFESSIONAL ENGINEER KRISTIN D. OLTA No. 62461 Exp. 9/30/13 CIVIL STATE OF CALIFORNIA	FEHR & PEERS TRANSPORTATION CONSULTANTS 2990 Lava Ridge Court Suite 200 Roseville, CA 95661 (916) 773-1900 Walnut Creek, CA · Roseville, CA · San Jose, CA · San Francisco, CA · Riverside, CA · Seattle, WA · Orange County, CA · Los Angeles County, CA · Salt Lake City, UT · Reno, NV · Denver, CO · San Diego, CA	DATE: 12/12/11 SCALE: 1"=20' DRAWN BY: JJA CK'D BY: KC DATE CK'D: 12/9/11	Revisions	Checked By / Date Checked	SHEET NO. 73 E-4 OF 90 SHEETS

CAD USER: janderson
PLOT DATE: Jan 26, 2012-01:21:52pm
FILE NAME: 2750-E-01-07
PATH: C:\Users\janderson\appdata\local\temp\AcPublish_7588\

CONDUCTOR SCHEDULE

CONDUCTOR DESIGNATION			NUMBER OF CONDUCTORS								
			RUN NUMBER								
CABLE TYPE	STD	PHASE	1	2	3	4	5	6	7	8	9
VEH–PED 12CSC	A	1,6,6P	1	1	1	1	1	1	1		
	B	6P,4P		2	2	2	2	2	2		
	C	3,4,4P		1	1	1	1	1	1		
	D	3,8,8P			1	1	1	1	1		
	E	8P,6P				2	2	2	2		
	F	5,6,6P				1	1	1	1		
	G	2,5,2P					1	1	1		
PPB 3CSC	H	2P,8P						2	2		
	I	7,8,8P						1	1		
	J	4,7,4P						1	1	1	
	K	4P,2P						2	2	2	
	L	1,2,2P						1	1	1	1
TOTAL CABLES 12/3 CONDUCTORS			1 –	2 2	3 2	4 4	5 4	8 8	8 8	2 2	1 –
#8		LIGHTING	2	2	2	2	2	2	–	2	–
CAMERA CABLE			2	2	3	3	4	5	5	1	–
SIGNAL INTERCONNECT CABLE								1	1	1	1
CONDUIT SIZE			3"	3"	2–3"	2–3"	2–4"	2–4"	2–4"	3"	2"
PERCENT FILL			16	24	17	21	15	23	22	20	11

EQUIPMENT SCHEDULE

STANDARD				PLACEMENT DIMENSIONS		SIGNAL MOUNTING			PED PUSH BUTTONS			HPS LUMINAIRE WATTAGE	STANDARD MAST ARM MOUNTED STREET NAME SIGN	COMMENTS
LOC	TYPE	SIG. MA (FEET)	LUM. MA (FEET)	"A"	"B"	MAST ARM VEHICLE	POLE VEHICLE	POLE PEDESTRIAN	ø	ARROW	QUAD			
A	26–4–100	45'	15'	8.5'	9.7'	MAT MAS	SV–1–T	SP–1–T	–	–	–	250W	N. Norma Street	INSTALL R73–3(CA) ON SIGNAL MAST ARM.
B	PPB POST	–	–	7.9'	CENTER	–	–	–	4 6	← →	EAST SOUTH	–		
C	1–B	–	–	7.4'	5.3'	–	TV–2–T	SP–1–T	–	–	–	–		
D	26–4–100	40'	15'	6.1'	3.2'	MAT MAS	SV–1–T	SP–1–T	–	–	–	250W	W. Ridgecrest Blvd	INSTALL R73–3(CA) ON SIGNAL MAST ARM.
E	PPB POST	–	–	6.3'	CENTER	–	–	–	6 8	← →	SOUTH WEST	–		
F	1–B	–	–	6.1'	6.6'	–	TV–2–T	SP–1–T	–	–	–	–		
G	26–4–100	45'	15'	8.3'	9.0'	MAT MAS	SV–1–T	SP–1–T	–	–	–	250W	S. Norma Street	INSTALL R73–3(CA) ON SIGNAL MAST ARM.
H	PPB POST	–	–	7.7'	CENTER	–	–	–	8 2	← →	WEST NORTH	–		
I	1–B	–	–	7.2'	7.0'	–	TV–2–T	SP–1–T	–	–	–	–		
J	26–4–100	45'	15'	7.9'	4.7'	MAT MAS	SV–1–T	SP–1–T	–	–	–	250W	W. Ridgecrest Blvd	INSTALL R73–3(CA) ON SIGNAL MAST ARM.
K	PPB POST	–	–	7.9'	CENTER	–	–	–	2 4	← →	NORTH EAST			
L	1–B	–	–	1.7'	13.0'	–	TV–2–T	SP–1–T	–	–	–	–		

CAD USER: janderson

PLOT DATE: Jan 26, 2012-01:21:53pm

FILE NAME: 2750-E-01-07

PATH: C:\Users\janderson\appdata\local\temp\AcPublish_7588\

JOB NO.	CITY OF RIDGECREST W. RIDGECREST BOULEVARD RECONSTRUCTION TRAFFIC SIGNAL PLAN	REGISTERED PROFESSIONAL ENGINEER KRISTIN D. OLIVA No. 62461 Exp. 9/30/13 CIVIL STATE OF CALIFORNIA	FEHR & PEERS TRANSPORTATION CONSULTANTS	2990 Lava Ridge Court Suite 200 Roseville, CA 95661 (916) 773-1900 Walnut Creek, CA · Roseville, CA · San Jose, CA · San Francisco, CA · Riverside, CA · Seattle, WA · Orange County, CA · Los Angeles County, CA · Salt Lake City, UT · Reno, NV · Denver, CO · San Diego, CA	DATE: 12/12/11 SCALE: NONE DRAWN BY: JJA CK'D BY: KC DATE CK'D: 12/9/11	Revisions	Checked By	Date Checked	SHEET NO. 74 E-5 OF 90 SHEETS
ST0101									

PROJECT NOTES (THIS SHEET ONLY):

1. ABANDON ALL EXISTING LOOPS IN THESE LANES.
2. REMOVE Exist 4 dlc AND RECONNECT 2 MLC TO CONTROLLER AS SHOWN. INSTALL EQUIPMENT IN CONTROLLER CABINET FOR VIDEO IMAGE VEHICLE DETECTION SYSTEM (SEE SPECIAL PROVISIONS).
3. 1 1/2"C, 2 MLC, 1 SIC.
4. Exist 1 1/2"C, 2#12 (ltg), 2#8 (service), 3#14 (peu).
5. FURNISH AND INSTALL VIDEO DETECTION CAMERA PER SPECIAL PROVISIONS AND DETAIL ON SHEET E-1. INSTALL EQUIPMENT IN CONTROLLER CABINET FOR VIDEO IMAGE VEHICLE DETECTION SYSTEM (SEE SPECIAL PROVISIONS).
6. 3"C, TYPE 3 CONDUIT PER STANDARD PLANS FOR MAGNETIC VEHICLE DETECTOR INSTALLATION.
7. 1 1/2"C, 1 SIC.

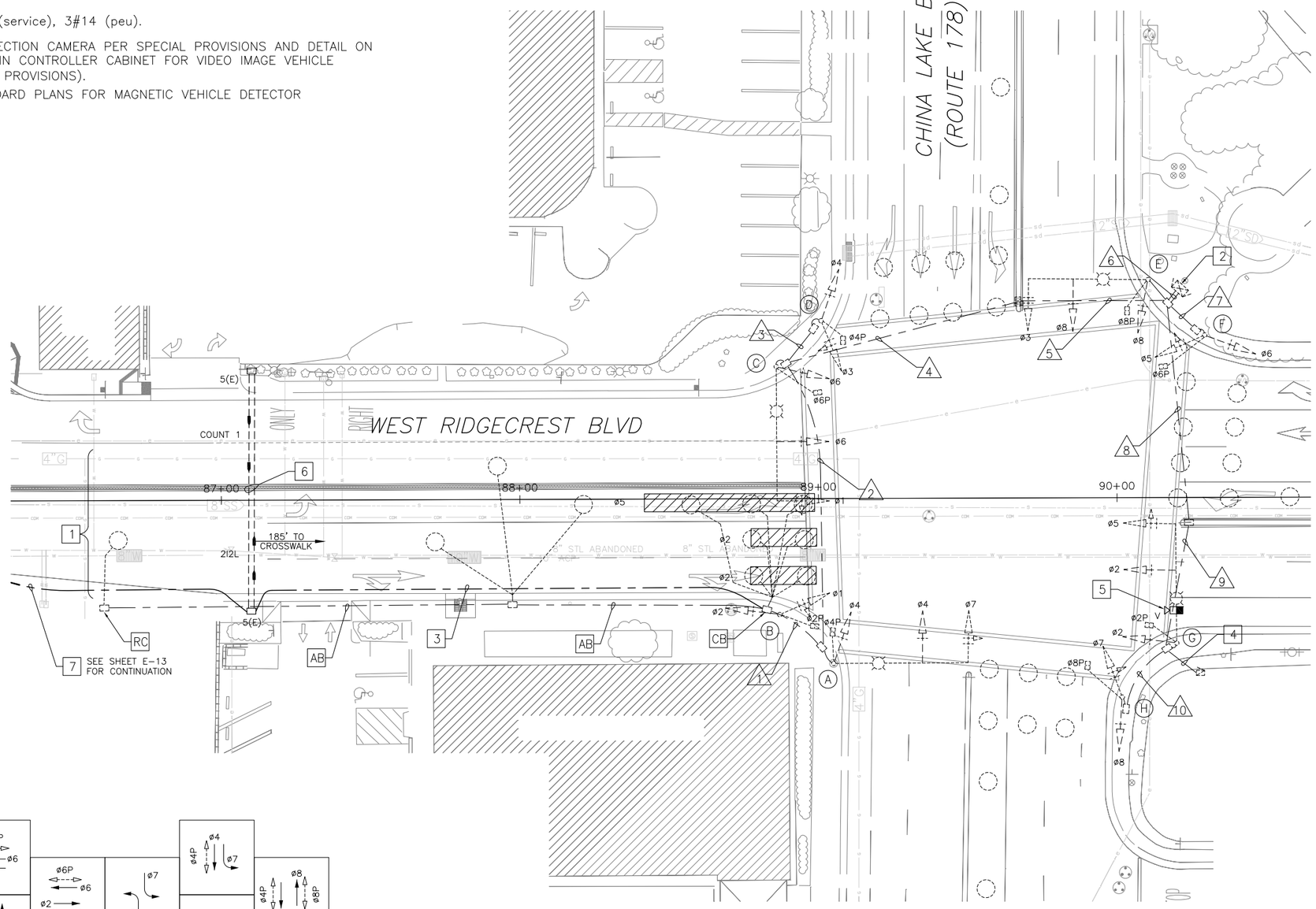

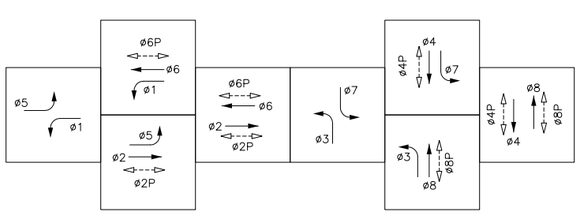

EXISTING PHASE DIAGRAM

JOB NO.	CITY OF RIDGECREST W. RIDGECREST BOULEVARD RECONSTRUCTION TRAFFIC SIGNAL PLAN	REGISTERED PROFESSIONAL ENGINEER KRISTIN D. OKLA No. 62461 Exp. 9/30/13 CIVIL STATE OF CALIFORNIA	FEHR & PEERS TRANSPORTATION CONSULTANTS	2990 Lava Ridge Court Suite 200 Roseville, CA 95661 (916) 773-1900	DATE: 12/12/11 SCALE: 1"=20' DRAWN BY: JJA CK'D BY: KC DATE CK'D: 12/9/11	Revisions	Checked By	Date Checked	SHEET NO. 75 E-6 OF 90 SHEETS
ST0101				Walnut Creek, CA · Roseville, CA · San Jose, CA · San Francisco, CA · Riverside, CA · Seattle, WA · Orange County, CA · Los Angeles County, CA · Salt Lake City, UT · Reno, NV · Denver, CO · San Diego, CA					

CAD USER: janderson
PLOT DATE: Jan 26, 2012-01:21:55pm
FILE NAME: 2750-E-01-07
PATH: C:\Users\janderson\appdata\local\temp\AcPublish_7588\

CONDUCTOR SCHEDULE

AWG OR CABLE	CONDUCTOR DESIGNATION	NUMBER OF CONDUCTORS — RUN NUMBER 1	2	3	4	5	6	7	8	9	10
No. 14	ø1	3	3		3	3	3				
	ø2	3	3		3	3	6		3	3	
	ø3			3	3	3	6				
	ø4		3	3	3	3	3				
	ø5						6	3	3	3	
	ø6				3	3	6	3			
	ø7		3		3	3	6		3	3	3
	ø8						6		3	3	3
	ø2 PED	2	2		2	2	4		2	2	
	ø4 PED		2	2	2	2	2				
	ø6 PED				2	2	4	2			
	ø8 PED						4		2	2	2
	ø2 PPB		1		1	1	2		1	1	1
	ø4 PPB	1	1		2	2	2				
	ø6 PPB			1	1	1	2				
	ø8 PPB						2	1	1	1	
	PPB NEUTRAL	1	1	1	1	1	1	1	1	1	1
	SPARES	3	3	3	3	3	3	3	3	3	3
	TOTAL No. 14	13	22	13	32	32	68	13	22	22	13
No. 12	LIGHTING		2		2	2			2	2	
No. 10	120 V NEUTRAL	1	1	1	1	1	1	1	1	1	1
No. 8	GROUND						1		1	1	
	SIGNAL SERVICE						2		2	2	
	TOTAL No. 8						3		3	3	
DLC	ø1 DETECTOR						1		1		
	ø2 DETECTOR	~~2~~ 1*	~~2~~ 1*		~~2~~ 1*	~~2~~ 1*	~~2~~ 1*				
	ø3 DETECTOR						1		1	1	1
	ø4 DETECTOR			2	2	2	2				
	ø5 DETECTOR	~~1~~	~~1~~		~~1~~	~~1~~	~~1~~				
	ø6 DETECTOR						2	2			
	ø7 DETECTOR					1	1				
	ø8 DETECTOR						2		2	2	2
	COUNT 1	~~1~~ 1*	~~1~~ 1*		~~1~~ 1*	~~1~~ 1*	~~1~~ 1*				
	COUNT 2					1	1				
	COUNT 3					1	1				
	COUNT 4						1		1		
	COUNT 5						1		1		
	COUNT 6						1		1		
	COUNT 7						1		1	1	1
	COUNT 8						1		1	1	1
	COUNT 9						1		1	1	1
	TOTAL DLC	2*	2*	2	2 2*	5 2*	17 2*	2	10	6	6
VIDEO DETECTION	CAMERA CABLE						1		1	1	
SIC		1	1		1	1	1				
	CONDUIT SIZE	2"	2.5"	2"	3"	3.5"	TWO 3.5"	2"	3.5"	3"	2.5"

* —DENOTES MLC CABLE

\# —DENOTES NEW CONDUCTOR

\# —DENOTES EXISTING CONDUIT OR CONDUCTOR

EQUIPMENT SCHEDULE

STANDARD LOC	STANDARD TYPE	SIG. MA (FEET)	LUM. MA (FEET)	SIGNAL MOUNTING MAST ARM VEHICLE	SIGNAL MOUNTING POLE VEHICLE	SIGNAL MOUNTING POLE PEDESTRIAN	PED PUSH BUTTONS ø	PED PUSH BUTTONS ARROW	HPS LUMINAIRE WATTAGE	COMMENTS
A	26-3-80	45'	12'	MAS MAS	SV-1-T	SP-1-T	2	←	200W	
B	1-A	–	–	–	TV-2-T	SP-1-T	4	→	–	
C	26-4-161	45'	12'	MAS MAS	SV-1-T	SP-1-T	4	←	200W	
D	1-A	–	–	–	TV-2-T	SP-1-T	6	→	–	
E	26-3-80	40'	12'	MAS MAS	SV-1-T	SP-1-T	6	←	200W	
F	1-A	–	–	–	TV-2-T	SP-1-T	8	→	–	
G	26-3-80	40'	12'	MAS MAS	SV-1-T	SP-1-T	8	←	200W	INSTALL VIDEO DETECTION CAMERA ON LUMINAIRE ARM. SEE DETAIL ON SHEET E-1.
H	1-A	–	–	–	TV-2-T	SP-1-T	2	→	–	

\# —DENOTES NEW EQUIPMENT

\# —DENOTES EXISTING EQUIPMENT

JOB NO.	CITY OF RIDGECREST W. RIDGECRECST BOULEVARD RECONSTRUCTION TRAFFIC SIGNAL PLAN
ST0101	

REGISTERED PROFESSIONAL ENGINEER — RUSTIN D. CALLA — No. 62461 Exp. 9/30/13 — CIVIL — STATE OF CALIFORNIA

FEHR & PEERS TRANSPORTATION CONSULTANTS
2990 Lava Ridge Court
Suite 200
Roseville, CA 95661
(916) 773-1900
Walnut Creek, CA · Roseville, CA · San Jose, CA · San Francisco, CA · Riverside, CA · Seattle, WA · Orange County, CA · Los Angeles County, CA · Salt Lake City, UT · Reno, NV · Denver, CO · San Diego, CA

DATE: 12/12/11
SCALE: NONE
DRAWN BY: JJA
CK'D BY: KC
DATE CK'D: 12/9/11

Revisions	Checked By	Date Checked

CAD USER: janderson
PLOT DATE: Jan 26, 2012-01:21:56pm
FILE NAME: 2750-E-01-07
PATH: C:\Users\janderson\appdata\local\temp\AcPublish_7588\

PROJECT NOTES (THIS SHEET ONLY):

1. INSTALL TYPE 15 LIGHTING STANDARD WITH 200 W LUMINAIRE MOUNTED ON A 6' LUMINAIRE ARM.
2. 1 1/2"C, 2#6 (LTG), 1#8G.
3. 1 1/2"C, 3#6 (LTG), 1#8G.
4. RC LUMINAIRE ARM AND CONDUCTORS. WOOD POLE TO BE REMOVED BY OTHERS.

N

40 0 40 80
1" = 40' GRAPHIC SCALE

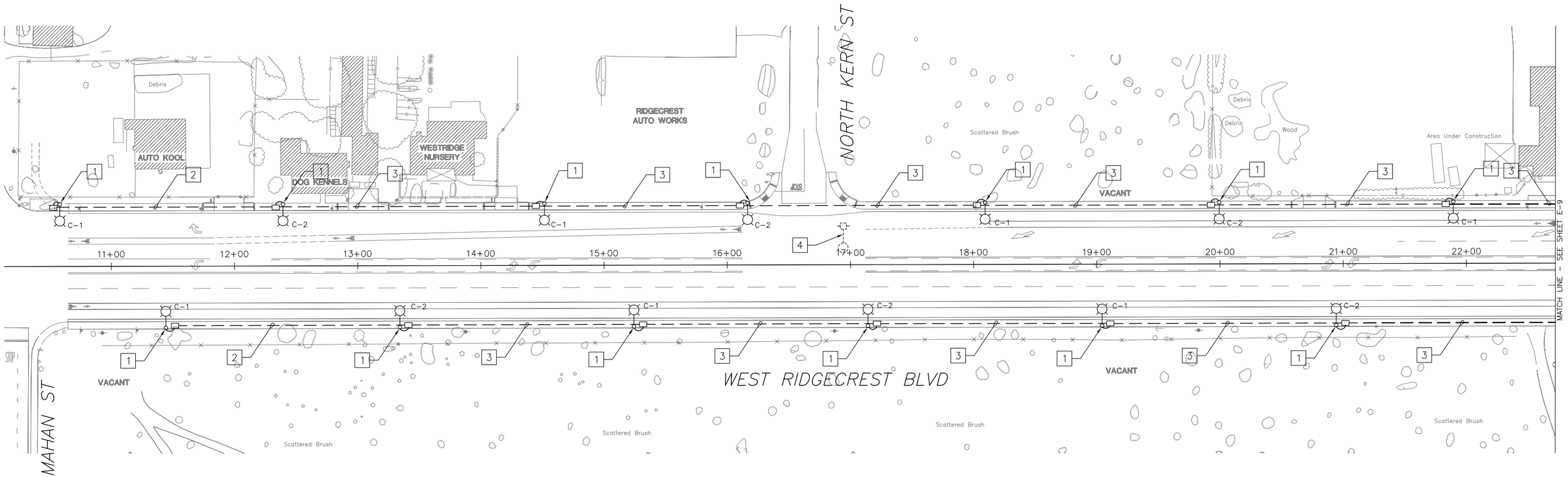

JOB NO.	CITY OF RIDGECREST W. RIDGECREST BOULEVARD RECONSTRUCTION LIGHTING PLAN	REGISTERED PROFESSIONAL ENGINEER KRISTIN D. CALLA No. 62461 Exp. 9/30/13 CIVIL STATE OF CALIFORNIA	FEHR & PEERS TRANSPORTATION CONSULTANTS	2990 Lava Ridge Court Suite 200 Roseville, CA 95661 (916) 773-1900 Walnut Creek, CA · Roseville, CA · San Jose, CA · San Francisco, CA · Riverside, CA · Seattle, WA · Orange County, CA · Los Angeles County, CA · Salt Lake City, UT · Reno, NV · Denver, CO · San Diego, CA	DATE: 12/12/11 SCALE: 1"=40' DRAWN BY: JJA CK'D BY: KC DATE CK'D: 12/9/11	Revisions	Checked By	Date Checked	SHEET NO. 77 E-8 OF 90 SHEETS
ST0101									

CAD USER: janderson
PLOT DATE: Jan 26, 2012-01:22:03pm
FILE NAME: 2750-E-08-E13
PATH: N:\2009Projects\2750_West_Ridgecrest_Blvd\CAD\Working_Drawings\Final_Submittal\

PROJECT NOTES (THIS SHEET ONLY):

1. INSTALL TYPE 15 LIGHTING STANDARD WITH 200 W LUMINAIRE MOUNTED ON A 6' LUMINAIRE ARM.
2. 1 1/2"C, 2#6 (LTG), 1#8G.
3. 1 1/2"C, 3#6 (LTG), 1#8G.
4. RC LUMINAIRE ARM AND CONDUCTORS. WOOD POLE TO BE REMOVED BY OTHERS.

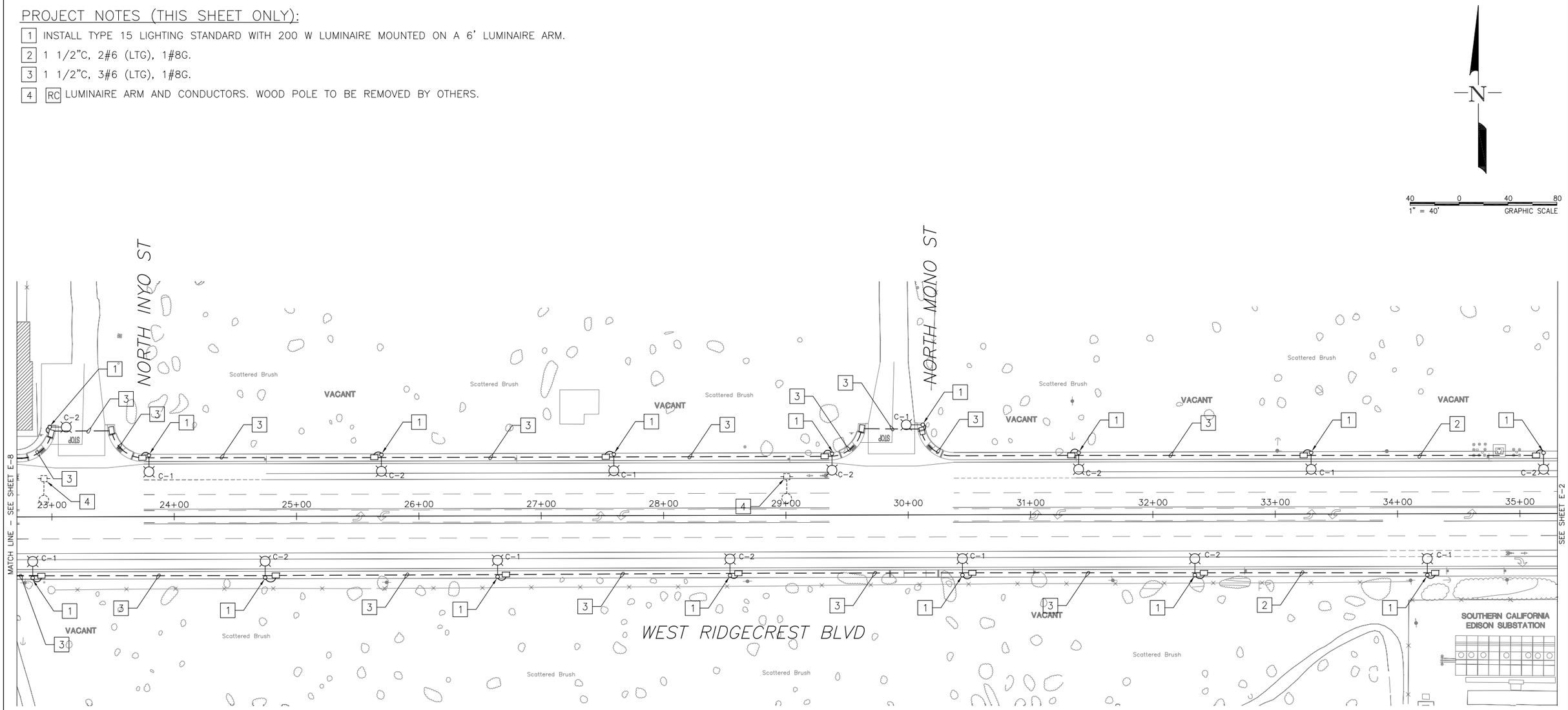

JOB NO.	CITY OF RIDGECREST W. RIDGECREST BOULEVARD RECONSTRUCTION LIGHTING PLAN	REGISTERED PROFESSIONAL ENGINEER RUSTIN D. CALLA No. 62461 Exp. 9/30/13 CIVIL STATE OF CALIFORNIA	FEHR & PEERS TRANSPORTATION CONSULTANTS	2990 Lava Ridge Court Suite 200 Roseville, CA 95661 (916) 773-1900	DATE: 12/12/11 SCALE: 1"=40' DRAWN BY: JJA CK'D BY: KC DATE CK'D: 12/9/11	Revisions	Checked By	Date Checked	SHEET NO. 78
ST0101				Walnut Creek, CA · Roseville, CA · San Jose, CA · San Francisco, CA · Riverside, CA · Seattle, WA · Orange County, CA · Los Angeles County, CA · Salt Lake City, UT · Reno, NV · Denver, CO · San Diego, CA					E-9 OF 90 SHEETS

CAD USER: janderson

PLOT DATE: Jan 26, 2012-01:22:05pm

FILE NAME: 2750-E-08-E13

PATH: N:\2009Projects\2750_West_Ridgecrest_Blvd\CAD\Working_Drawings\Final_Submittal\

PROJECT NOTES (THIS SHEET ONLY):

1. INSTALL TYPE 15 LIGHTING STANDARD WITH 200 W LUMINAIRE MOUNTED ON A 6' LUMINAIRE ARM.
2. 1 1/2"C, 2#6 (LTG), 1#8G.
3. SPLICE NEW TO EXISTING CONDUCTORS.
4. 1 1/2"C, 1 SIC.
5. 1 1/2"C, 3#6 (LTG), 1#8G.

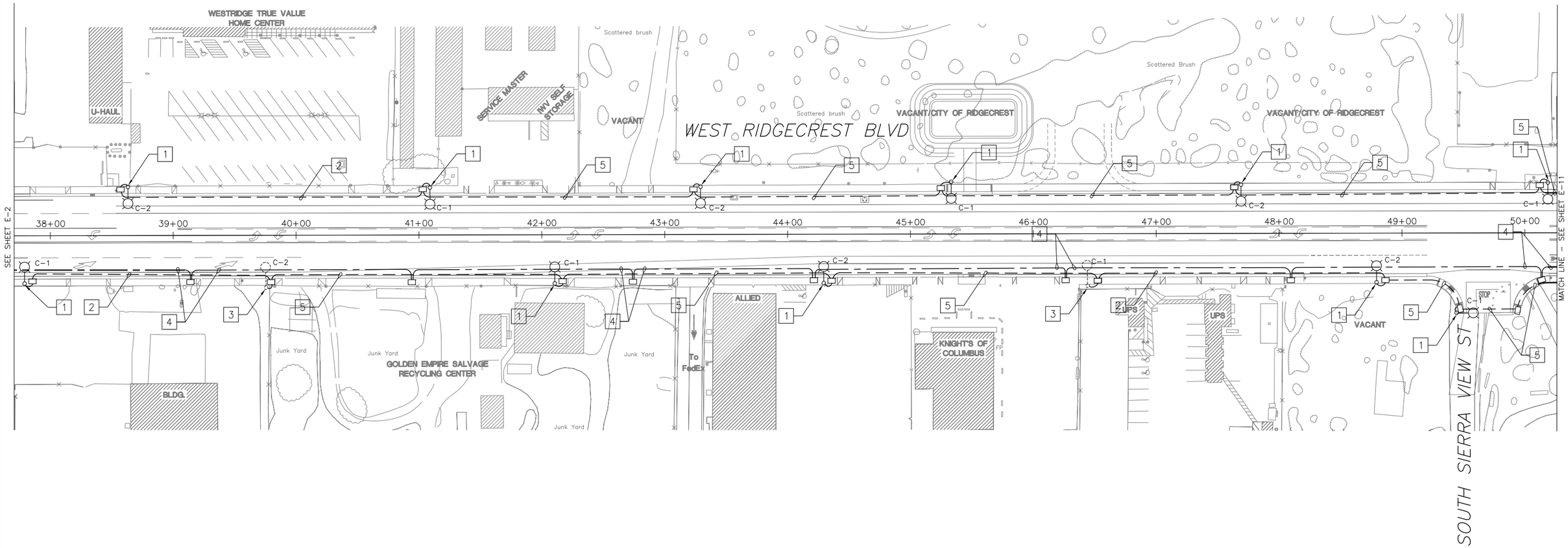

JOB NO.	CITY OF RIDGECREST W. RIDGECREST BOULEVARD RECONSTRUCTION LIGHTING PLAN	REGISTERED PROFESSIONAL ENGINEER KRISTIN D. OLIA No. 62461 Exp. 9/30/13 CIVIL STATE OF CALIFORNIA	FEHR & PEERS TRANSPORTATION CONSULTANTS	2990 Lava Ridge Court Suite 200 Roseville, CA 95661 (916) 773-1900	DATE: 12/12/11 SCALE: 1"=40' DRAWN BY: JJA CK'D BY: KC DATE CK'D: 12/9/11	Revisions	Checked By	Date Checked	SHEET NO. 79 E-10 OF 90 SHEETS
ST0101				Walnut Creek, CA · Roseville, CA · San Jose, CA · San Francisco, CA · Riverside, CA · Seattle, WA · Orange County, CA · Los Angeles County, CA · Salt Lake City, UT · Reno, NV · Denver, CO · San Diego, CA					

CAD USER: janderson
PLOT DATE: Jan 26, 2012-01:22:07pm
FILE NAME: 2750-E-08-E13
PATH: N:\2009Projects\2750_West_Ridgecrest_Blvd\CAD\Working_Drawings\Final_Submittal\

PROJECT NOTES (THIS SHEET ONLY):

1. INSTALL TYPE 15 LIGHTING STANDARD WITH 200 W LUMINAIRE MOUNTED ON A 6' LUMINAIRE ARM.
2. 1 1/2"C, 2#6 (LTG), 1#8G.
3. SPLICE NEW TO EXISTING CONDUCTORS.
4. 1 1/2"C, 1 SIC.
5. 1 1/2"C, 3#6 (LTG), 1#8G.

N

40 0 40 80
1" = 40' GRAPHIC SCALE

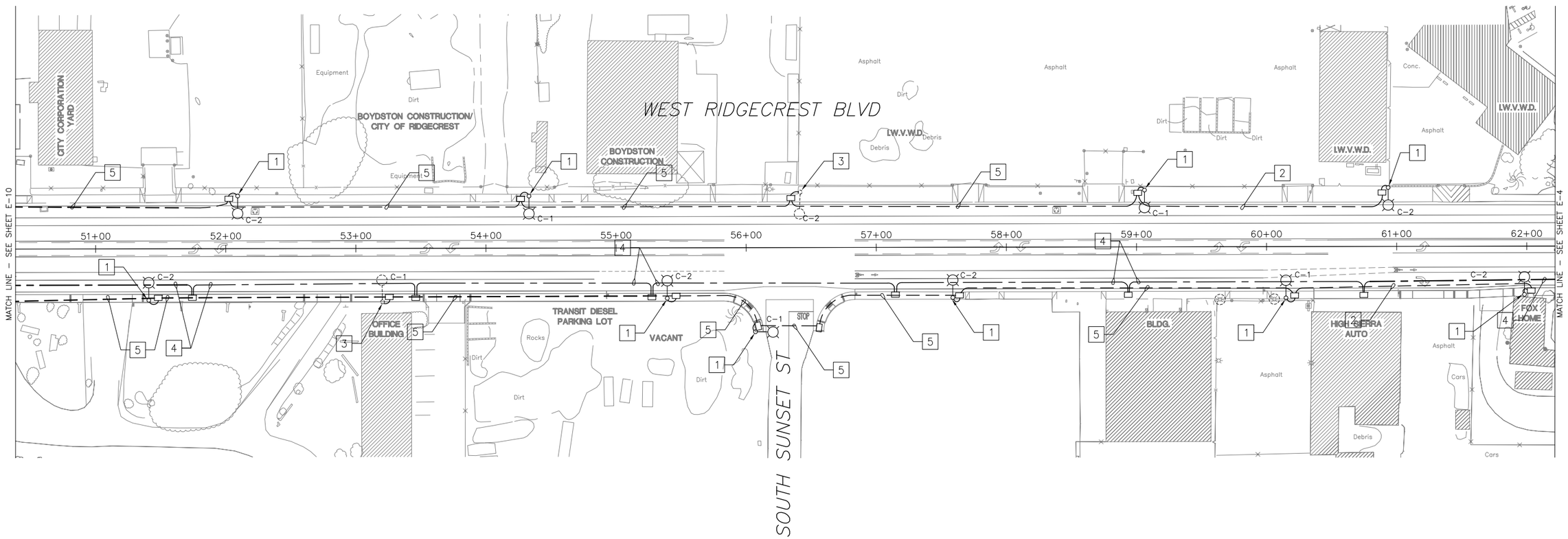

JOB NO.	CITY OF RIDGECREST W. RIDGECREST BOULEVARD RECONSTRUCTION LIGHTING PLAN	REGISTERED PROFESSIONAL ENGINEER KRISTIN D. CALLA No. 62461 Exp. 9/30/13 CIVIL STATE OF CALIFORNIA	FEHR & PEERS TRANSPORTATION CONSULTANTS	2990 Lava Ridge Court Suite 200 Roseville, CA 95661 (916) 773-1900	DATE: 12/12/11 SCALE: 1"=40' DRAWN BY: JJA CK'D BY: KC DATE CK'D: 12/9/11	Revisions	Checked By	Date Checked	SHEET NO. 80
ST0101				Walnut Creek, CA · Roseville, CA · San Jose, CA · San Francisco, CA · Riverside, CA · Seattle, WA · Orange County, CA · Los Angeles County, CA · Salt Lake City, UT · Reno, NV · Denver, CO · San Diego, CA					E-11
									OF 90 SHEETS

CAD USER: janderson
PLOT DATE: Jan 26, 2012-01:22:09pm
FILE NAME: 2750-E-08-E13
PATH: N:\2009Projects\2750_West_Ridgecrest_Blvd\CAD\Working_Drawings\Final_Submittal\

PROJECT NOTES (THIS SHEET ONLY):

1. 1 1/2"C, 1 SIC.
2. 1 1/2"C, 2#6 (LTG), 1#8G.
3. INSTALL 150 W DECORATIVE LUMINAIRE PER DETAIL ON SHEET E-1.
4. 1 1/2"C, 3#6 (LTG), 1#8G.

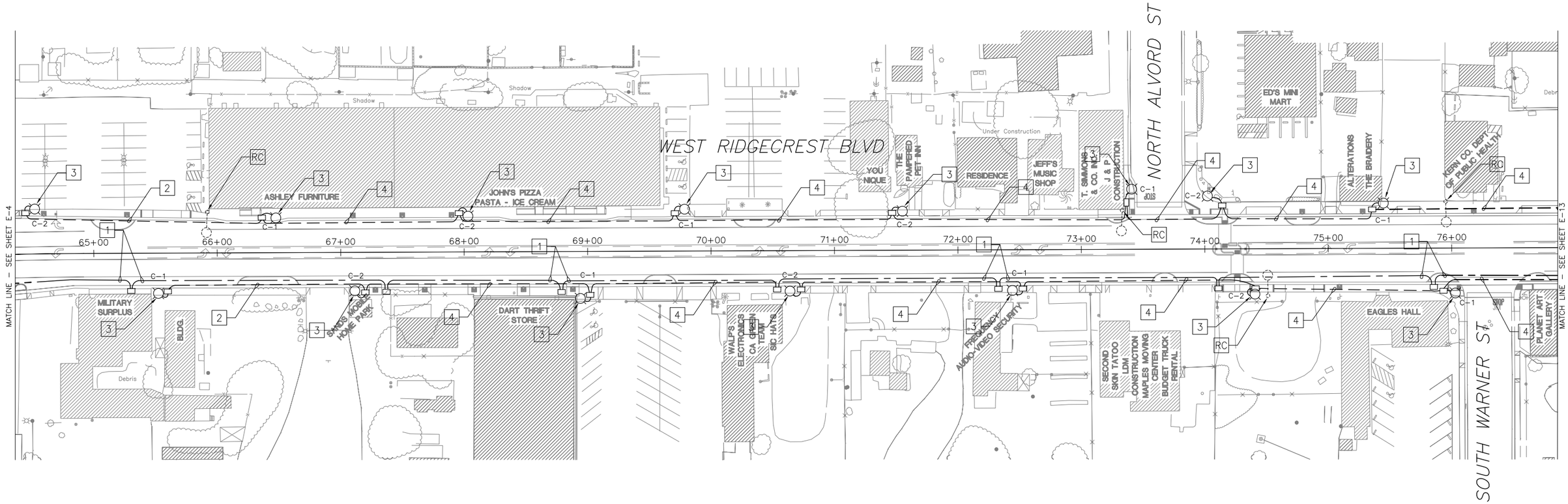

JOB NO.	CITY OF RIDGECREST W. RIDGECREST BOULEVARD RECONSTRUCTION LIGHTING PLAN	REGISTERED PROFESSIONAL ENGINEER RUSTIN D. CALLA No. 62461 Exp. 9/30/13 CIVIL STATE OF CALIFORNIA	FEHR & PEERS TRANSPORTATION CONSULTANTS	2990 Lava Ridge Court Suite 200 Roseville, CA 95661 (916) 773-1900 Walnut Creek, CA · Roseville, CA · San Jose, CA · San Francisco, CA · Riverside, CA · Seattle, WA · Orange County, CA · Los Angeles County, CA · Salt Lake City, UT · Reno, NV · Denver, CO · San Diego, CA	DATE: 12/12/11 SCALE: 1"=40' DRAWN BY: JJA CK'D BY: KC DATE CK'D: 12/9/11	Revisions	Checked By	Date Checked	SHEET NO. 81 E-12 OF 90 SHEETS
ST0101									

CAD USER: janderson
PLOT DATE: Jan 26, 2012-01:22:11pm
FILE NAME: 2750-E-08-E13
PATH: N:\2009Projects\2750_West_Ridgecrest_Blvd\CAD\Working_Drawings\Final_Submittal\

PROJECT NOTES (THIS SHEET ONLY):

1. 1 1/2"C, 1 SIC.
2. 1 1/2"C, 2#6 (LTG), 1#8G.
3. 1 1/2"C, 3#6 (LTG), 1#8G.
4. INSTALL 150 W DECORATIVE LUMINAIRE PER DETAIL ON SHEET E-1.

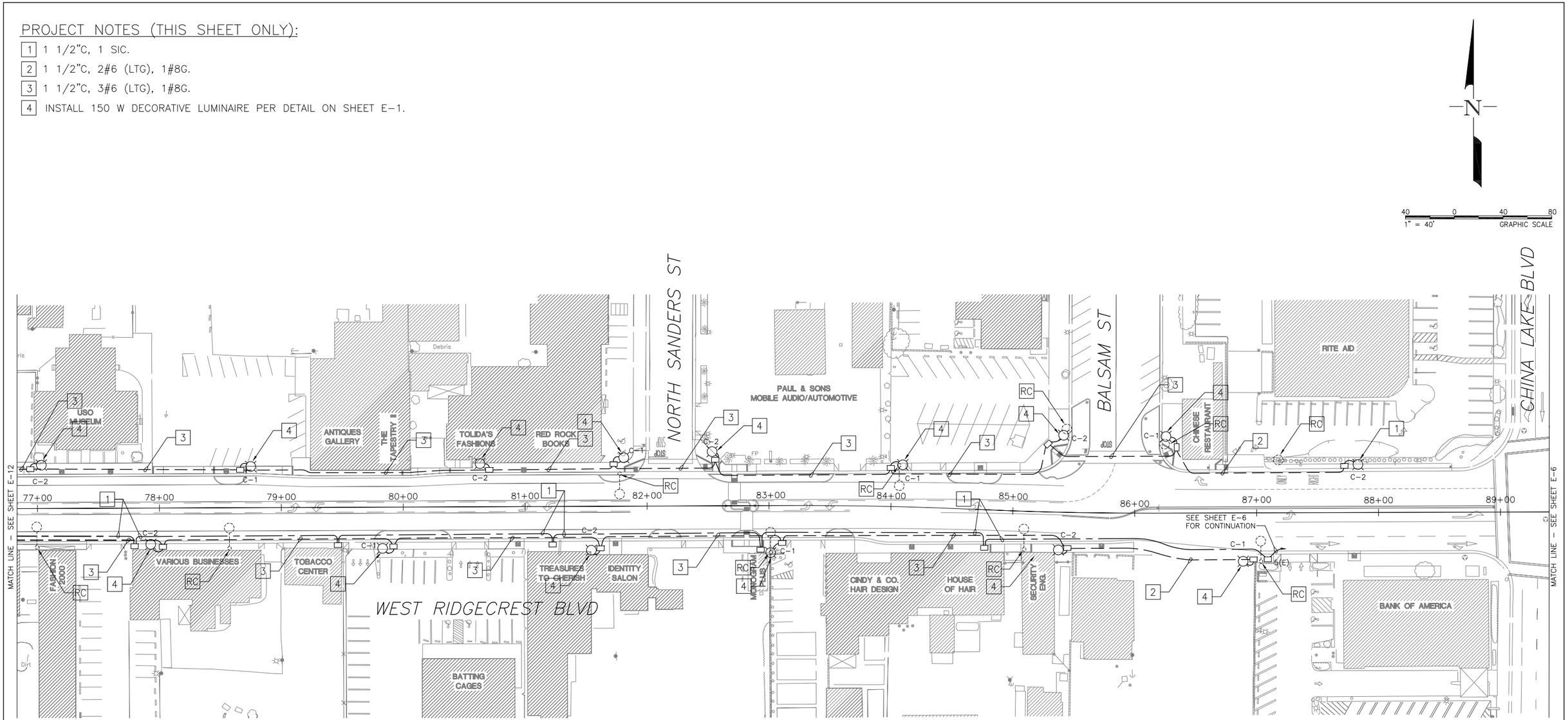

JOB NO.	CITY OF RIDGECREST W. RIDGECREST BOULEVARD RECONSTRUCTION LIGHTING PLAN	REGISTERED PROFESSIONAL ENGINEER RUSTIN D. CALLA No. 62461 Exp. 9/30/13 CIVIL STATE OF CALIFORNIA	FEHR & PEERS TRANSPORTATION CONSULTANTS	2990 Lava Ridge Court Suite 200 Roseville, CA 95661 (916) 773-1900	DATE: 12/12/11 SCALE: 1"=40' DRAWN BY: JJA CK'D BY: KC DATE CK'D: 12/9/11	Revisions	Checked By	Date Checked	SHEET NO. 82
ST0101				Walnut Creek, CA · Roseville, CA · San Jose, CA · San Francisco, CA · Riverside, CA · Seattle, WA · Orange County, CA · Los Angeles County, CA · Salt Lake City, UT · Reno, NV · Denver, CO · San Diego, CA					E-13 OF 90 SHEETS

CAD USER: janderson
PLOT DATE: Jan 26, 2012-01:22:14pm
FILE NAME: 2750-E-08-E13
PATH: N:\2009Projects\2750_West_Ridgecrest_Blvd\CAD\Working_Drawings\Final_Submittal\

PLANT LIST AND PLANTING SPECIFICATIONS

PLANT GROUP	PLANT NO.	SYMBOL	BOTANICAL NAME	COMMON NAME	SIZE	QUANTITY EACH	HOLE SIZE (IN)		BASIN TYPE	IRON SULFATE	SOIL AMEND (cy)	COMMERCIAL FERTILIZER ①		BASIN MULCH (cy)	STAKING	PLANTING LIMITS MINIMUM DISTANCE (ft) FROM						ON CENTER (ft)	REMARKS
							Dia	DEPTH		①	①	PLANTING	PLT ESTB	①		TRVD WAY	Pvmt	FENCE	WALL	PAVED DITCH	EARTH DITCH		
A	1		CALLIANDRA ERIOPHYLLA	PINK FAIRY DUSTER	No. 1	30	⑧	②	–	–	0.01 yd^3	1 PKT	0.25 lbs	–	–	–	–	–	–	–	–	④	SHRUB
	2		HESPERALOE PARVIFOLIA	RED YUCCA	No. 1	92	⑧	②	–	–	0.01 yd^3	1 PKT	0.25 lbs	–	–	–	–	–	–	–	–	④	SHRUB
	3		STIPA TENUISSIMA	MEXICAN FEATHER GRASS	No. 1	396	⑧	②	–	–	0.01 yd^3	1 PKT	0.25 lbs	–	–	–	–	–	–	–	–	2	SHRUB
K	4		CHITALPA TASHKENTENSIS	PINK DAWN CHITALPA	24" BOX	29	⑧	②	III	–	0.07 yd^3	9 PKT	0.5 lbs	–	⑥	–	–	–	–	–	–	④	TREE 1 ¼"-3" CALIPER 8'-16' TRUNK HEIGHT

APPLICABLE WHEN CIRCLED:

① QUANTITIES SHOWN ARE "PER PLANT" UNLESS SHOWN AS FT^2 APPLICATION RATES.
② SUFFICIENT TO RECEIVE ROOT BALL.
3 DOES NOT APPLY TO MULCH AREAS.
④ AS SHOWN ON PLANS
5 UNLESS OTHERWISE SHOWN ON PLANS
⑥ REQUIRED
7 SEE SPECIAL PROVISIONS
⑧ TWICE THE SIZE OF ROOT BALL
9 ROOT PROTECTOR
10 SEE DETAIL

NOTE:
UNDERLINED PORTIONS OF BOTANICAL NAME INDICATE ABBREVIATIONS USED ON PLANTING PLAN

100% SUBMITTAL

Project No.							
ST0101	CITY OF RIDGECREST W. RIDGECREST BOULEVARD RECONSTRUCTION PLANT LIST	LICENSED LANDSCAPE ARCHITECT J. Patrick Boyd, No. 4682 Signature JULY 31, 2013 Revised Date Date STATE OF CALIFORNIA	designlab 252 P.O. Box 27616 Fresno, CA 93729 studio: 559.472.9966 fax: 559.472.9969	DATE: 12/06/2011 SCALE: AS NOTED DRAWN BY: KJ CK'D BY: PB DATE CK'D: 12/06/2011	Revisions	Checked By	Date Checked	SHEET NO. 83 PL–1 OF 90 SHEETS

LIMIT OF PLANTING PLAN

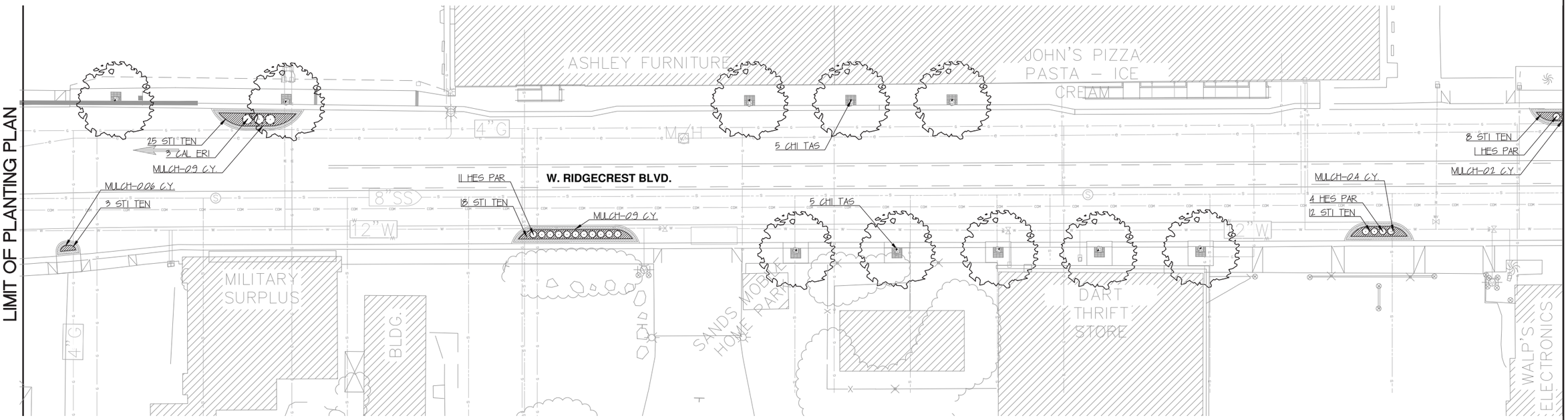

MATCHLINE 'A' - SEE BELOW

MATCHLINE 'A' - SEE ABOVE

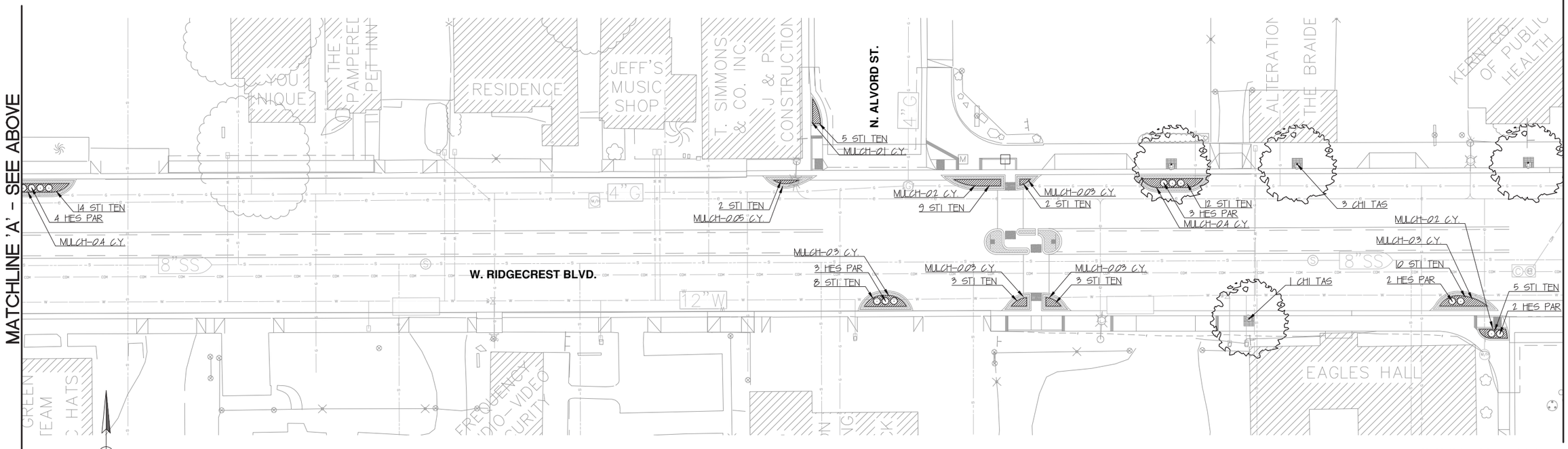

MATCHLINE 'B' - SEE SHEET PP-2

100% SUBMITTAL

SCALE: 1"=20'-0"

THIS PLAN ACCURATE FOR PLANTING WORK ONLY

Project No.	CITY OF RIDGECREST W. RIDGECREST BOULEVARD RECONSTRUCTION PLANTING PLAN	LICENSED LANDSCAPE ARCHITECT J. Patrick Boyd, No. 4882 Signature JULY 31, 2013 Renewal Date Date STATE OF CALIFORNIA	designlab 252 P.O. Box 27616 Fresno, CA 93729 studio: 559.472.9966 fax: 559.472.9969	DATE: 12/06/2011 SCALE: AS NOTED DRAWN BY: KJ CK'D BY: PB DATE CK'D: 12/06/2011	Revisions	Checked By	Date Checked	SHEET NO. 84 PP–1 OF 90 SHEETS
ST0101								

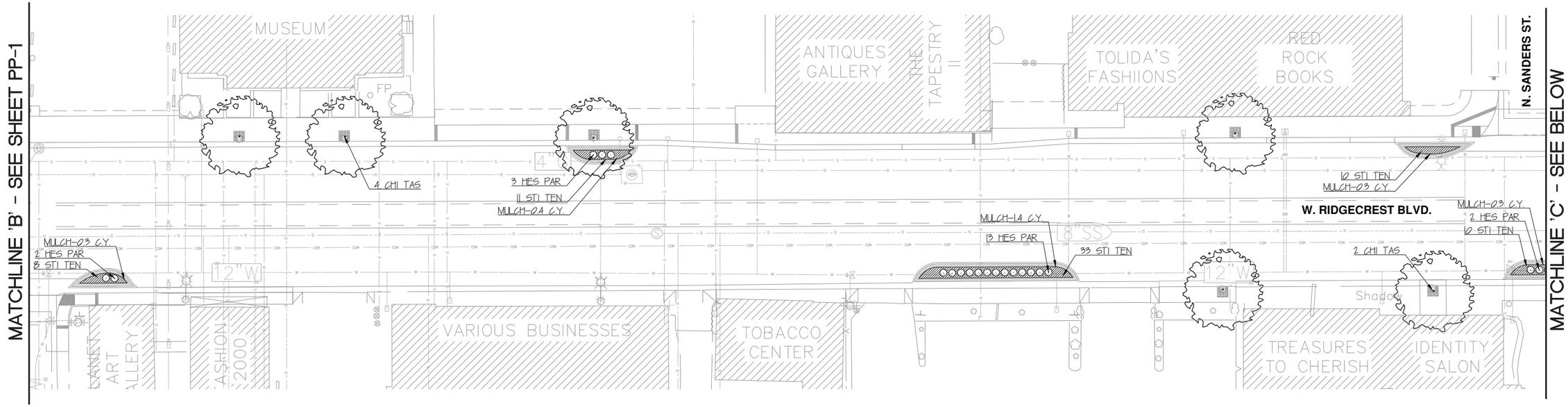

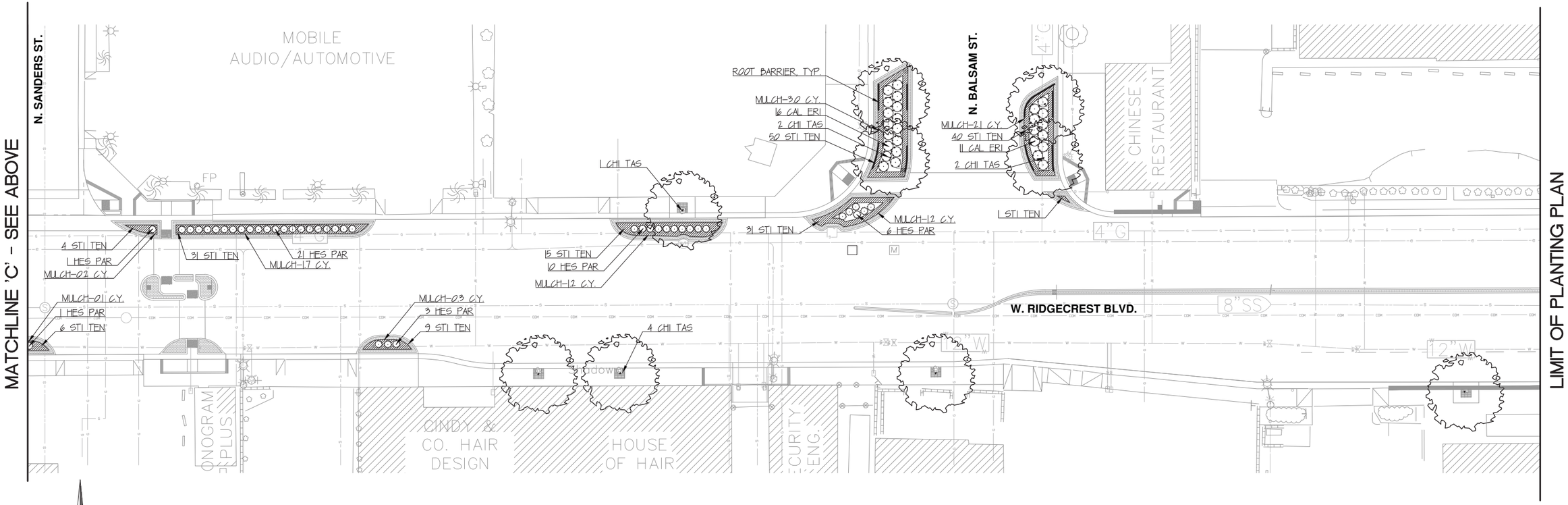

SCALE: 1"=20'-0"

THIS PLAN ACCURATE FOR PLANTING WORK ONLY

100% SUBMITTAL

Project No.	CITY OF RIDGECREST W. RIDGECREST BOULEVARD RECONSTRUCTION PLANTING PLAN	designlab 252 P.O. Box 27616 Fresno, CA 93729 studio: 559.472.9966 fax: 559.472.9969	DATE: 12/06/2011 SCALE: AS NOTED DRAWN BY: KJ CK'D BY: PB DATE CK'D: 12/06/2011	Revisions	Checked By	Date Checked	SHEET NO. 85
ST0101							PP-2 OF 90 SHEETS

LICENSED LANDSCAPE ARCHITECT
J. Patrick Boyd, No. 4862
Signature
JULY 31, 2013
Renewal Date
Date
STATE OF CALIFORNIA

LATERAL PIPE SIZING CHART	
No. OF HEADS BY TYPE (BUBBLER)	PIPE SIZE
≤16	3/4"
≤30	1"
≤53	1 1/4"
≤80	1 1/2"
≤133	2"
≤200	2 1/2"

VALVE CODE

REMOTE CONTROL VALVE SIZE
IRRIGATION CONTROLLER
CONTROLLER STATION
GALLON PER MINUTE
QUANTITY OF BUBBLER HEADS

2"-A-1-45-48

LEGEND

- COPPER PIPE, TYPE K (SUPPLY LINE) (MAIN)
- COPPER PIPE, TYPE K (SUPPLY LINE) (LATERAL) UNDER ROADWAY
- SCHEDULE 80 PVC PIPE (SUPPLY LINE) (LATERAL) WITHIN PLANTER LIMITS
- M EXISTING WATER METER (WM)
- C IRRIGATION CONTROLLER IN CONTROLLER ENCLOSURE CABINET (ICC) WITH RAIN SENSOR
- BACKFLOW PREVENTER IN ENCLOSURE (BPAE)
- REMOTE CONTROL MASTER VALVE (RCVM), REMOTE CONTROL VALVE (RCV)
- FS FLOW SENSOR (FS)
- GATE VALVE (GV)
- F FILTER ASSEMBLY UNIT (FAU)
- P REMOTE CONTROL VALVE WITH PRESSURE REGULATOR (RCVP)

NOTE:

1. ALL IRRIGATION WORK SHOWN IS DIAGRAMMATIC. PLACE ALL IRRIGATION EQUIPMENT IN ADJACENT PLANTERS.

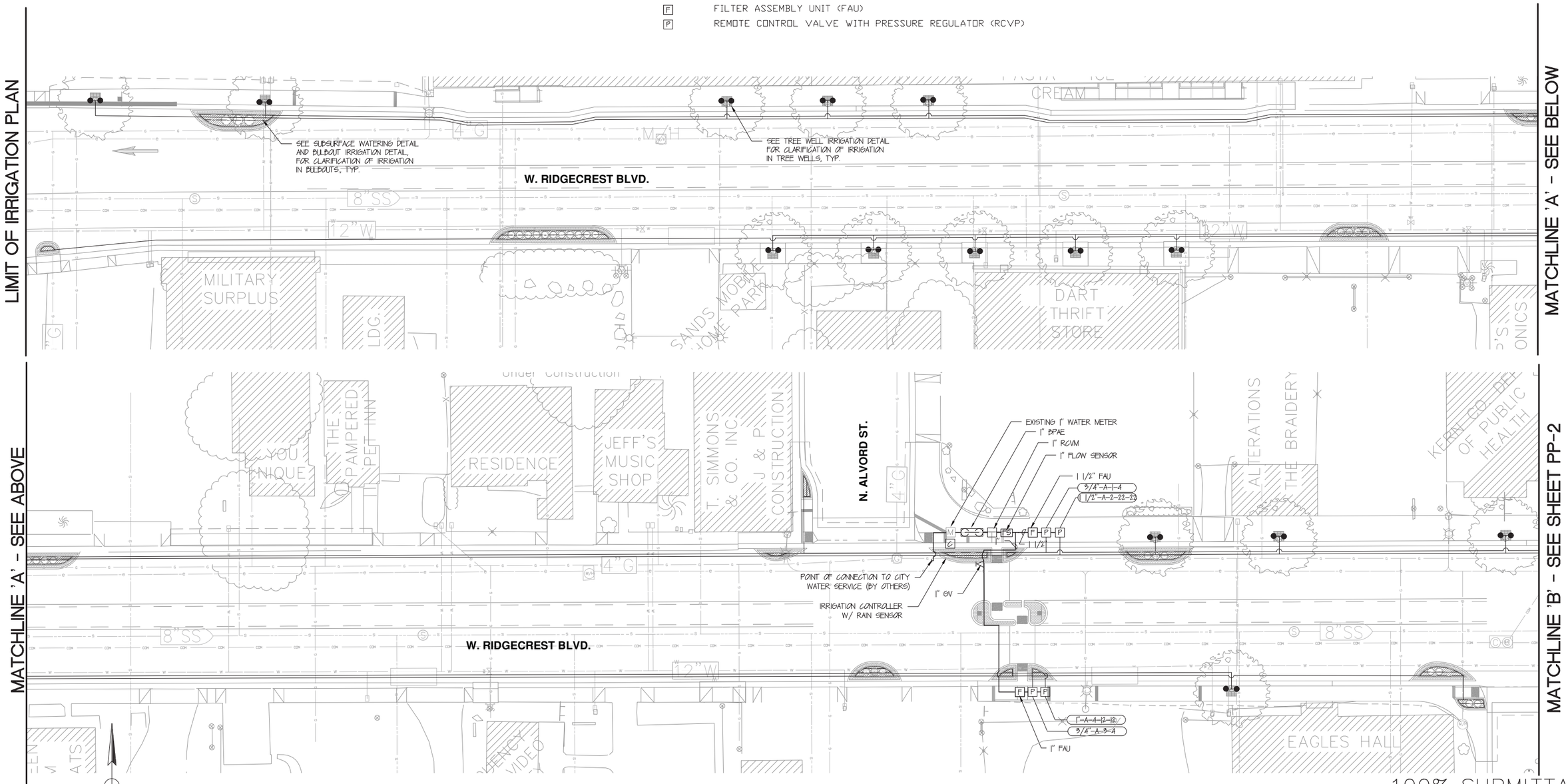

100% SUBMITTAL

SCALE: 1'=20'-0'

THIS PLAN ACCURATE FOR IRRIGATION WORK ONLY

Project No.	CITY OF RIDGECREST W. RIDGECREST BOULEVARD RECONSTRUCTION IRRIGATION PLAN	LICENSED LANDSCAPE ARCHITECT Patrick Boyd, No. 4825 JULY 31, 2013 STATE OF CALIFORNIA	designlab 252 P.O. Box 27616 Fresno, CA 93729 studio: 559.472.9966 fax: 559.472.9969	DATE: 12/06/2011 SCALE: AS NOTED DRAWN BY: KJ CK'D BY: PB DATE CK'D: 12/06/2011	Revisions	Checked By	Date Checked	SHEET NO. 86
ST0101								IP-1 OF 90 SHEETS

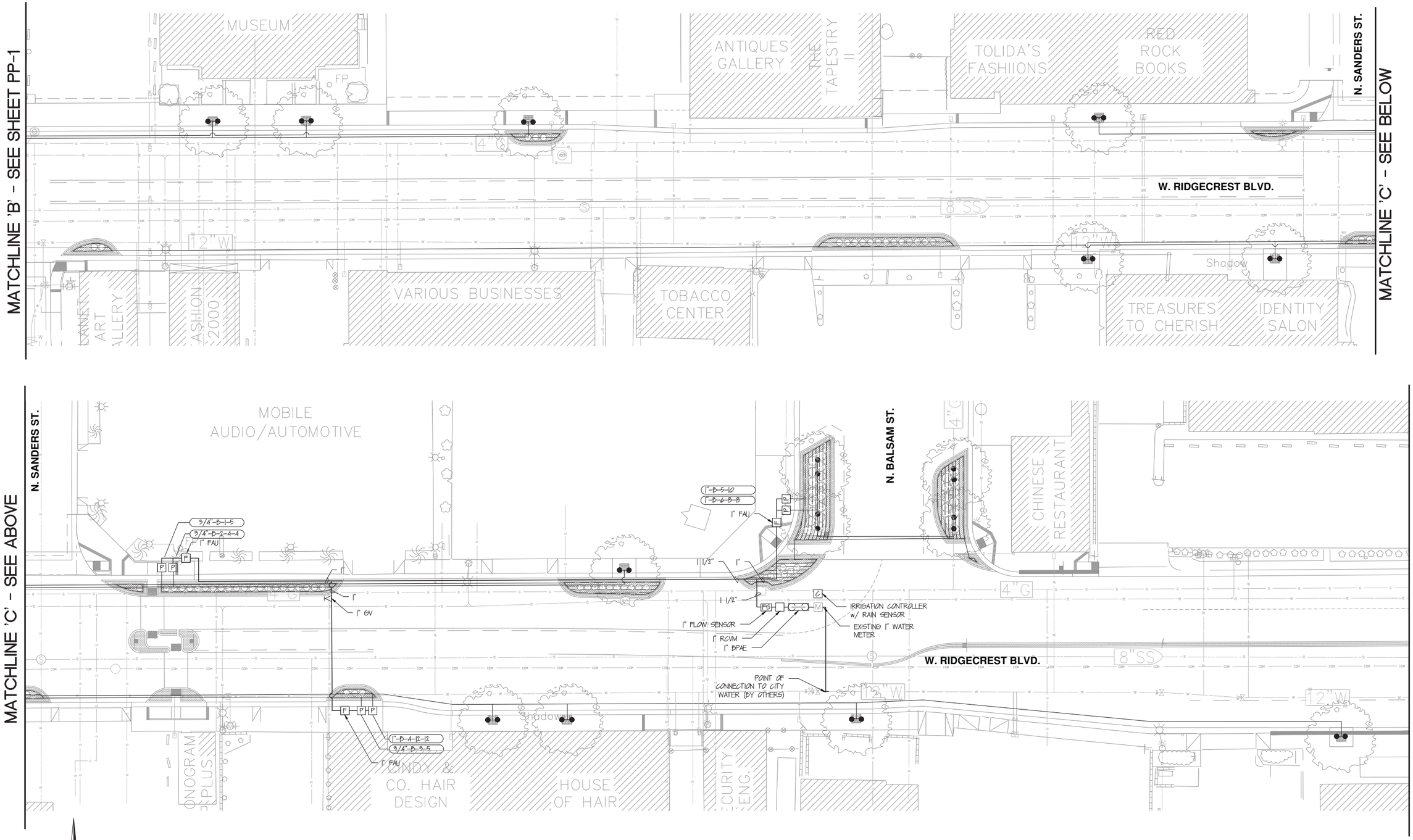

SCALE: 1"=20'-0"

THIS PLAN ACCURATE FOR IRRIGATION WORK ONLY

100% SUBMITTAL

Project No.	CITY OF RIDGECREST W. RIDGECREST BOULEVARD RECONSTRUCTION IRRIGATION PLAN	LICENSED LANDSCAPE ARCHITECT J. Patrick Boyd, No. 4862 Signature JULY 31, 2013 Renewal Date Date STATE OF CALIFORNIA	designlab 252 P.O. Box 27616 Fresno, CA 93729 studio: 559.472.9966 fax: 559.472.9969	DATE: 12/06/2011 SCALE: AS NOTED DRAWN BY: KJ CK'D BY: PB DATE CK'D: 12/06/2011	Revisions	Checked By	Date Checked	SHEET NO. 87 IP-2 OF 90 SHEETS
ST0101								

SPRINKLER SCHEDULE

SYMBOL	DESCRIPTION	SPRAY PATTERN	OPERATING PRESSURE	PRESSURE COMPENSATING	PLUS/MINUS 5% ② DISCHARGE: GALLONS PER SECOND G/s	GALLONS PER MINUTE G/Min	GALLONS PER HOUR G/h	RADIUS (IN FEET) (ft)	WIDTH X LENGTH (IN FEET) (ft)	MATERIAL	NOZZLE SIZE IN INCHES (in)	INLET CONNECTION (NPT) (DN IN INCHES)(in)	POSITIVE-LOCKING ADJ ARC STOP	BACKSPLASH PREVENTER	DIFFUSER PIN	DISTANCE CONTROL FLAP	adj DISCHARGE	RISER: TYPE	RISER MATERIAL: PLASTIC	RISER MATERIAL: GALVANIZED	RISER: size (IPS) (IN INCHES)(in)	RISER: HEIGHT (IN INCHES)(in)	RISER: FLOW SHUTOFF DEVICE	SWING JOINT (TYPE)	RISER SUPPORT	SPRINKLER PROTECTOR (TYPE)	REMARKS
•	FLOOD BUBBLER IN ROOT WATERING SYSTEM	--	35	--	--	1.0	--	--	--	PL	--	1/2	--	--	--	--	--	V	X	--	1/2	--	--	--	--	--	36" ROOT WATERING TUBE REQUIRED
————	DRIP EMITTER LINE	--	35	--	--	--	1.0	--	--	PL	--	--	--	--	--	--	--	--	--	--	--	--	--	--	--	--	18" OC EMITTERS

X: DENOTES REQUIREMENT

APPLICABLE WHEN CIRCLED BELOW:

1 SEE SPECIAL PROVISIONS
② IF PRESSURE-COMPENSATING DEVICE IS SPECIFIED, THE DISCHARGE AND RADII SHOWN REFLECT ITS USE
3 ARC STOP FOR IMPACTS SHALL BE FITTED WITH A NUT AND BOLT.
4 VINYL-COATED CAST IRON HOUSING
5 REQUIRED ADJACENT TO SHOULDERS, CURBS, SIDEWALKS AND DIKES.
6 UNLESS OTHERWISE NOTED ON PLANS.

ABREVIATIONS

Adj ——— adjustable
B/B ——— brass/bronze
B/B/PL ——— brass/bronze/plastic
B/PL ——— brass/plastic
CST ——— center strip
DN ——— diameter nominal
EST ——— end strip
F ——— full circle
F/P ——— full/part circle
H ——— half circle
IPS ——— iron pipe size
PSI ——— pounds per square inch
G/h ——— gallons per hour
G/Min ——— gallons per minute
G/s ——— gallons per second
ft ——— feet
in ——— inches
NPT ——— national pipe thread
P ——— part circle
PL ——— plastic
Q ——— quarter circle
SST ——— side strip
T ——— third circle
TQ ——— three quarter circle
TT ——— two thirds circle

NOTES:
1. INSTALL ALL WIRING AS PER LOCAL CODES.
2. INSTALL CONTROLLER AS PER MOUNTING INSTRUCTIONS.
3. INSTALL CONTROLLER WITHIN BACKFLOW PREVENTER CAGE.

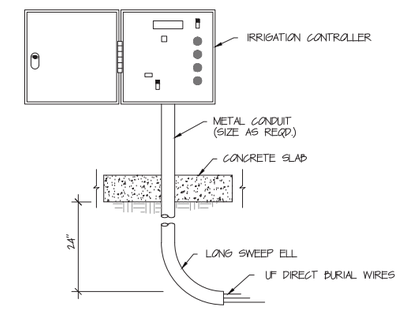

IRRIGATION CONTROLLER

NO SCALE

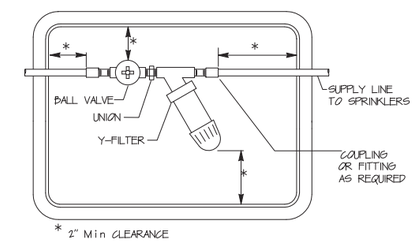

PLAN VIEW

FILTER ASSEMBLY UNIT

NO SCALE

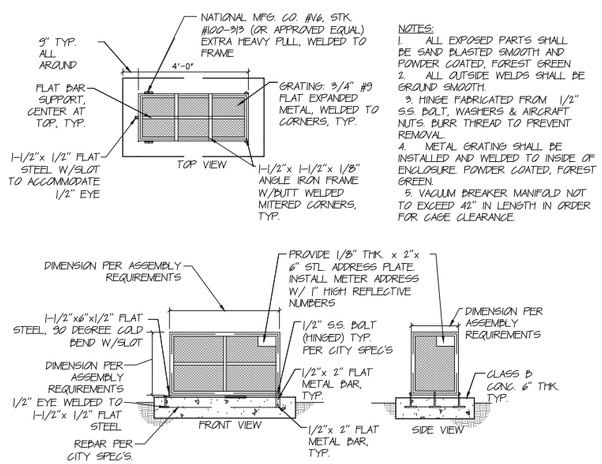

NOTES:
1. ALL EXPOSED PARTS SHALL BE SAND BLASTED SMOOTH AND POWDER COATED, FOREST GREEN
2. ALL OUTSIDE WELDS SHALL BE GROUND SMOOTH.
3. HINGE FABRICATED FROM 1/2" S.S. BOLT, WASHERS & AIRCRAFT NUTS. BURR THREAD TO PREVENT REMOVAL.
4. METAL GRATING SHALL BE INSTALLED AND WELDED TO INSIDE OF ENCLOSURE. POWDER COATED, FOREST GREEN.
5. VACUUM BREAKER MANIFOLD NOT TO EXCEED 42" IN LENGTH IN ORDER FOR CAGE CLEARANCE.

BACKFLOW PREVENTER ENCLOSURE

NO SCALE

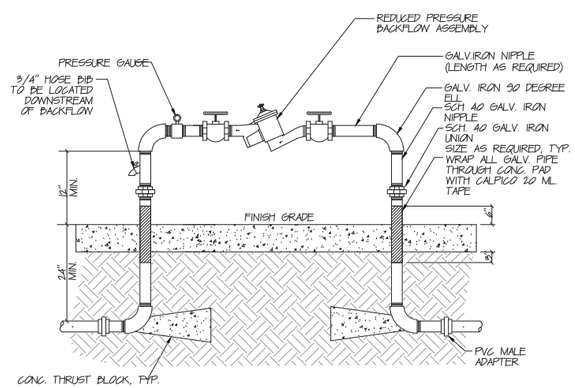

BACKFLOW PREVENTER

NO SCALE

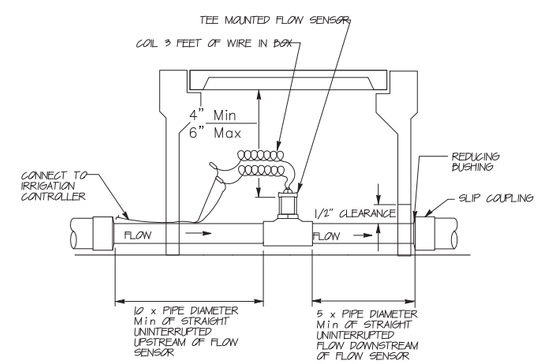

ELEVATION

FLOW SENSOR

NO SCALE

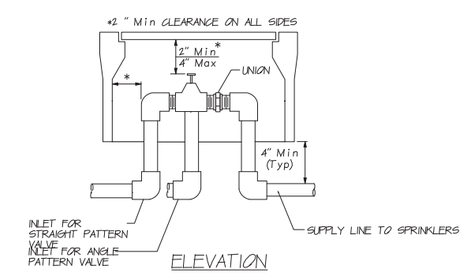

ELEVATION

REMOTE CONTROL VALVE

NO SCALE

100% SUBMITTAL

Project No.							
ST0101	CITY OF RIDGECREST W. RIDGECREST BOULEVARD RECONSTRUCTION LANDSCAPE DETAILS	LICENSED LANDSCAPE ARCHITECT J. Patrick Boyd, No. 4882 JULY 31, 2013 STATE OF CALIFORNIA	designlab 252 P.O. Box 27616 Fresno, CA 93729 studio: 559.472.9966 fax: 559.472.9969	DATE: 12/06/2011 SCALE: AS NOTED DRAWN BY: KJ CK'D BY: PB DATE CK'D: 12/06/2011	Revisions	Checked By	Date Checked	SHEET NO. 88 LD-1 OF 90 SHEETS

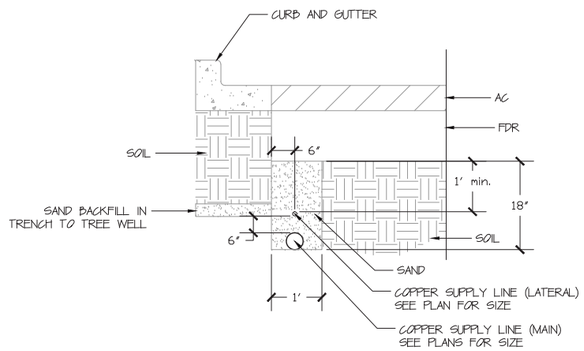

IRRIGATION SUPPLY LINE (MAIN AND LATERAL) PLACEMENT

NO SCALE

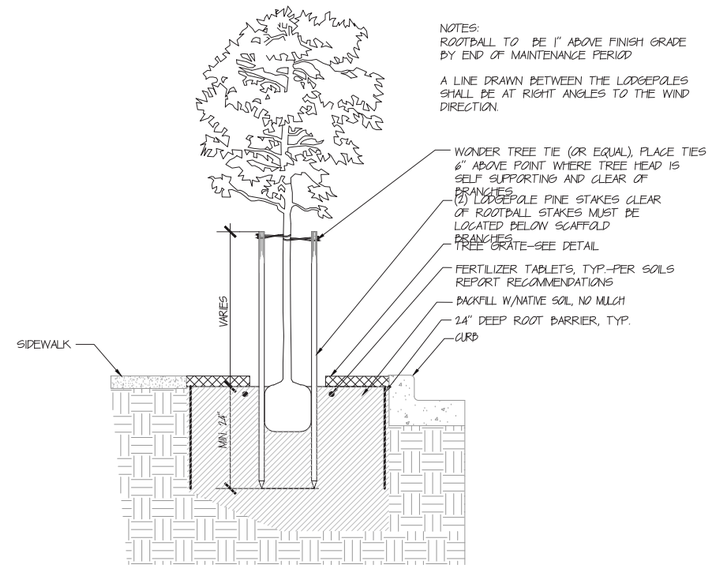

TREE WELL PLANTING DETAIL

NO SCALE

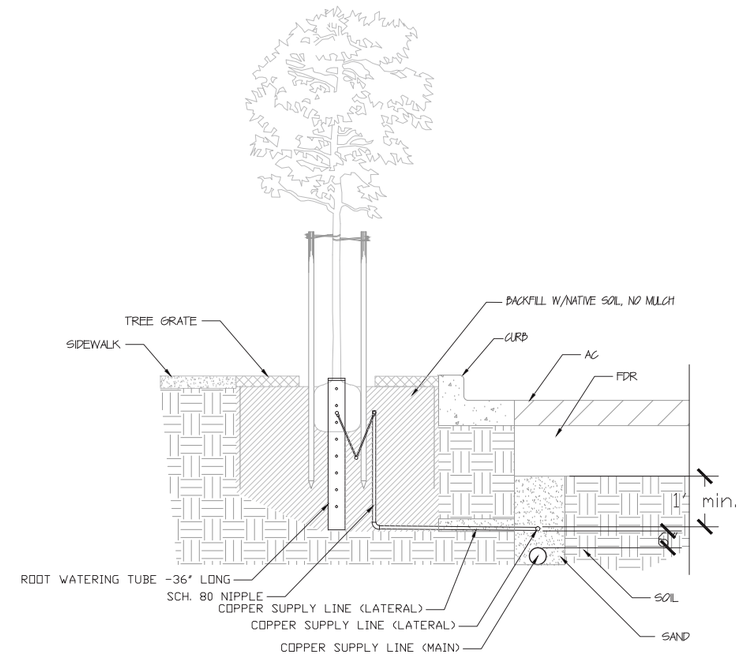

TREE WELL IRRIGATION DETAIL

NO SCALE

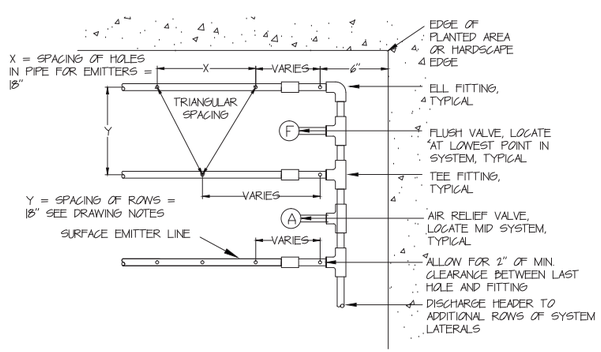

SUBSURFACE EMITTER LAYOUT

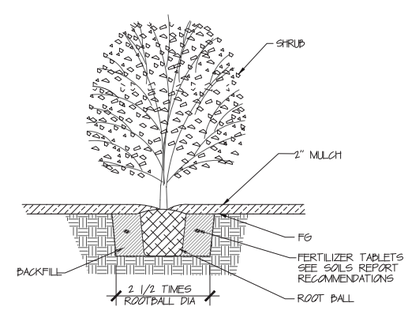

SHRUB PLANTING DETAIL

NO SCALE

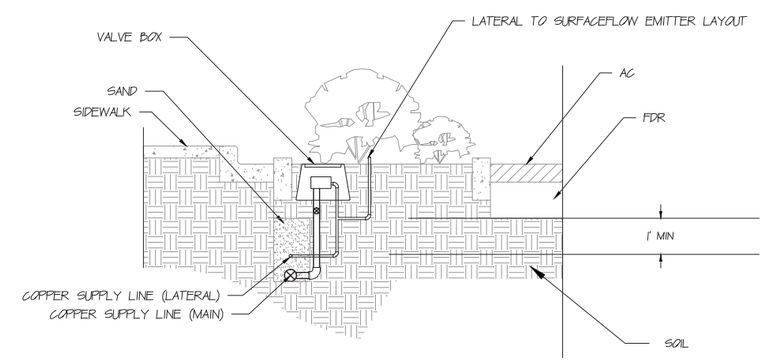

BULBOUT IRRIGATION DETAIL

NO SCALE

100% SUBMITTAL

Project No.							
ST0101	CITY OF RIDGECREST W. RIDGECREST BOULEVARD RECONSTRUCTION LANDSCAPE DETAILS	LICENSED LANDSCAPE ARCHITECT J. Patrick Boyd, No. 4682 Signature JULY 31, 2013 Renewal Date STATE OF CALIFORNIA	designlab 252 P.O. Box 27616 Fresno, CA 93729 studio: 559.472.9966 fax: 559.472.9969	DATE: 12/06/2011 SCALE: AS NOTED DRAWN BY: KJ CK'D BY: PB DATE CK'D: 12/06/2011	Revisions	Checked By	Date Checked

SHEET NO. 89

LD-2

OF 90 SHEETS

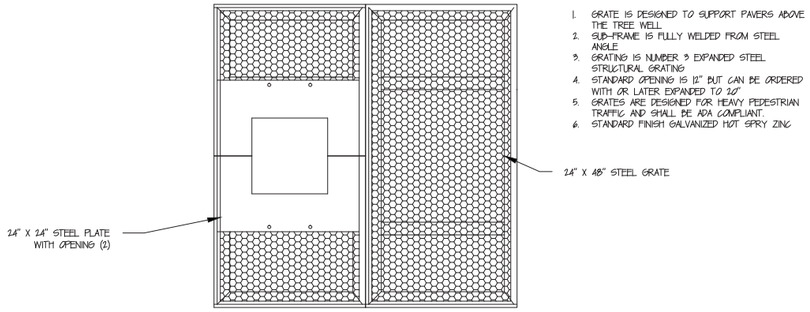

1. GRATE IS DESIGNED TO SUPPORT PAVERS ABOVE THE TREE WELL
2. SUB-FRAME IS FULLY WELDED FROM STEEL ANGLE
3. GRATING IS NUMBER 3 EXPANDED STEEL STRUCTURAL GRATING
4. STANDARD OPENING IS 12" BUT CAN BE ORDERED WITH OR LATER EXPANDED TO 20"
5. GRATES ARE DESIGNED FOR HEAVY PEDESTRIAN TRAFFIC AND SHALL BE ADA COMPLIANT.
6. STANDARD FINISH GALVANIZED HOT SPRY ZINC

PLAN VIEW

TREE GRATE (PAVER GRATE SYSTEM)

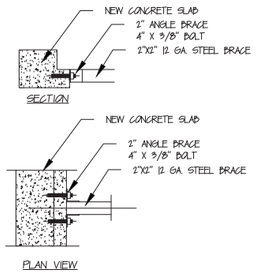

TREE WELL BRACE DETAIL (NEW CONCRETE SLAB)

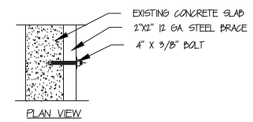

TREE WELL BRACE DETAIL (EXISTING CONCRETE SLAB)

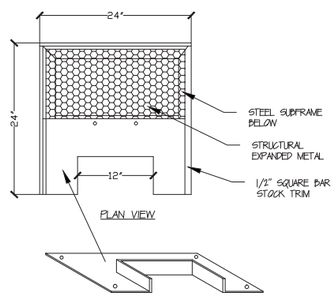

ISOMETRIC

STEEL PLATE WITH OPENING

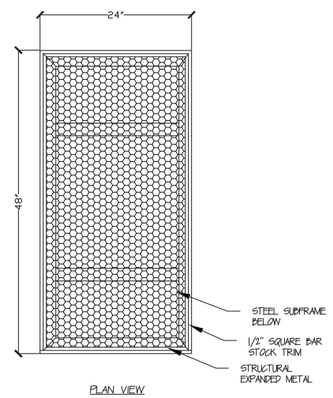

PLAN VIEW

STEEL GRATE

OUTSIDE DIMENSION OF OPENING EQUALS PAVER GRATE SIZE PLUS 1/4" MIN.

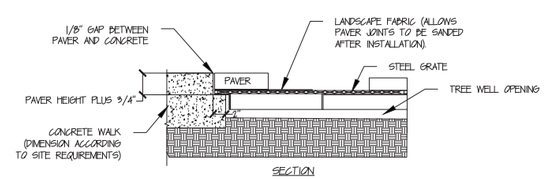

PAVER GRATE ASSEMBLY

TREE GRATE DETAIL

NO SCALE

100% SUBMITTAL

Project No.	CITY OF RIDGECREST W. RIDGECREST BOULEVARD RECONSTRUCTION LANDSCAPE DETAILS	LICENSED LANDSCAPE ARCHITECT Patrick Boyd, No. 4882 JULY 31, 2013 STATE OF CALIFORNIA	designlab 252 P.O. Box 27616 Fresno, CA 93729 studio: 559.472.9966 fax: 559.472.9969	DATE: 12/06/2011 SCALE: AS NOTED DRAWN BY: KJ CK'D BY: PB DATE CK'D: 12/06/2011	Revisions	Checked By	Date Checked	SHEET NO. 90 LD-3 OF 90 SHEETS
ST0101								