PLOT DATE: Jun 02, 2010-08:11:32am CAD USER: ksmith
FILE NAME: RCB_T-1
PATH: V:\Ridgecrest - FN-09105 - Ridgecrest Blvd\CADD\Drawing\

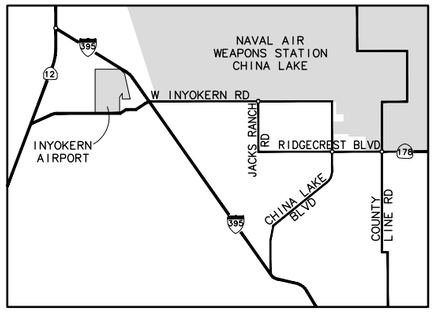

VICINITY MAP

CITY OF RIDGECREST

RIDGECREST BLVD IMPROVEMENTS
MAHAN STREET TO CHINA LAKE BOULEVARD
PROJECT NO. XX-XX

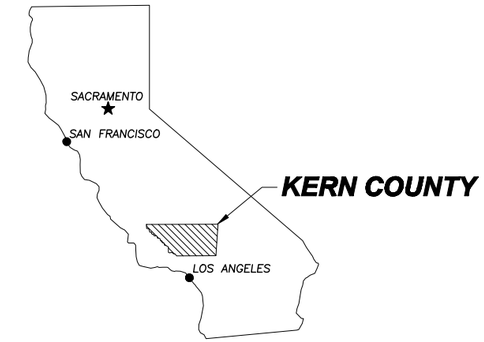

NOT TO SCALE

APPROVED BY: _____ _____
DENNIS SPEER, R.C.E. 28289 DATE
PUBLIC WORKS DIRECTOR

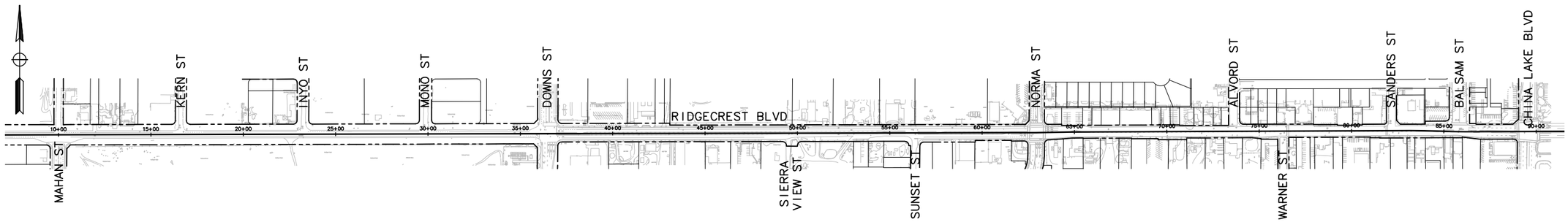

LOCATION MAP

ABBREVIATIONS

AB	AGGREGATE BASE
AC	ASPHALT CONCRETE
AP	ANGLE POINT
APPROX	APPROXIMATE
BC	BEGIN CURVE
Beg	BEGIN
BOC	BACK OF CURB
BOW	BACK OF WALK
BR	BOTTOM OF RAMP
BVC	BEGIN VERTICAL CURVE
C&G	CURB & GUTTER
C,G,&SW	CURB, GUTTER, & SIDEWALK
CL	CENTERLINE/CLASS
CMP	CORRUGATED METAL PIPE
CONC	CONCRETE
COR	CITY OF RIDGECREST
CT	COURT
CTB	CEMENT TREATED BASE
D	DIAMETER
DI	DRAINAGE INLET
DR	DRIVE
DWY	DRIVEWAY
E	EAST
EB	EASTBOUND
EC	END CURVE
EL	ELEVATION
ELEC	ELECTRICAL
EP	EDGE OF PAVEMENT
ETW	EDGE OF TRAVEL WAY
EVC	END VERTICAL CURVE
(E)	EXISTING
FES	FLARED END SECTION
FG	FINISH GRADE
FH	FIRE HYDRANT
FL	FLOW LINE
FOC	FACE OF CURB
G	GAS
GB	GRADE BREAK
H	HEIGHT
HP	HINGE POINT/HIGH POINT
INV	INVERT
IWVWD	INDIAN WELLS VALLEY WATER DISTRICT
LCF	LEFT MEDIAN CURB FACE
LF	LINEAR FEET
LIP	LIP OF GUTTER
L/PE	LANDSCAPE/PEDESTRIAN EASEMENT
LN	LANE
Lt	LEFT
MAX	MAXIMUM
MH	MANHOLE
MIN	MINIMUM
MOD	MODIFIED
(N)	NEW
N	NORTH
NB	NORTHBOUND
NO.	NUMBER
NTS	NOT TO SCALE
OC	ON CENTER
OG	ORIGINAL GROUND
PCC	PORTLAND CEMENT CONCRETE
PG	PROFILE GRADE
PI	POINT OF INTERSECTION
PL	PROPERTY LINE
PRC	POINT OF REVERSING CURVE
(P)	PROPOSED
PT	POINT OF TANGENCY
PUE	PUBLIC UTILITY EASEMENT
PVI	POINT VERTICAL INTERSECTION
R	RADIUS
RCB	REINFORCED CONCRETE BOX
RCF	RIGHT MEDIAN CURB FACE
RCP	REINFORCED CONCRETE PIPE
RD	ROAD
RSP	ROCK SLOPE PROTECTION
Rt	RIGHT
R/W	RIGHT OF WAY
S	SOUTH / SLOPE
SB	SOUTHBOUND
SSCO	SANITARY SEWER CLEAN OUT
SD	STORM DRAIN
SDMH	STORM DRAIN MANHOLE
SS	SANITARY SEWER
SSMH	SANITARY SEWER MANHOLE
ST	STREET
STA	STATION
STD	STANDARD
SW	SIDEWALK
TBC	TOP BACK OF CURB
TBW	TOP BACK OF WALK
TC	TOP OF CURB
TCE	TEMPORARY CONSTRUCTION EASEMENT
TFC	TOP FACE OF CURB
TR	TOP OF RAMP
TRANS	TRANSITION
TYP	TYPICAL
V	VERTICAL
VAR	VARIES
VC	VERTICAL CURVE
VGFL	VALLEY GUTTER FLOW LINE
W	WEST/WATER
WB	WESTBOUND
WV	WATER VALVE
WY	WAY

CONVENTIONAL SYMBOLS

CENTERLINE	—·——·—	ANGLE POINT	△
TOPO LINES		POINT ON CURVE	○
R/W LINE	——·——	PULLBOX	▭
PROPERTY LINE	— — — —	WATER VALVE	⋈
PUE	——·——	SPRINKLER	⊠
CUT LINE	—·—c·——	HYDRANT	⊣O⊢
EDGE OF PAVEMENT	———	TREE	◯
EXIST FENCE	—x—	UTILITY POLE	●—
EXIST SD	xxSD	ANCHOR POLE	●
PROPOSED SD	xxSD	GUY ANCHOR	⟵
EXIST SEWER	xxSS	LIGHT STANDARD	⊗
PROPOSED SEWER	xxSS	GAS VALVE	⊗
EXIST TELEPHONE	—T——T—	DRAINAGE INLET	▪
EXIST WATER	—W——W—	MANHOLE	⌾
PROPOSED WATER	x W	DITCH FL	---→
EXIST ELECTRICITY	—E——E—		
EXIST GAS	—G——G—		
EXIST MANHOLE	⌾		
PROPOSED MANHOLE	●		

SHEET INDEX

SHEET	DRAWING	DESCRIPTION
1	T-1	TITLE SHEET
2	S-1	SURVEY CONTROL
3 TO 6	X-1 TO X-4	TYPICAL CROSS SECTIONS
7 TO 8	D-1 TO D-2	ROADWAY DETAILS
9 TO 15	L-1 TO L-7	LAYOUTS
16 TO 28	CD-1 TO CD-13	CONSTRUCTION DETAILS
29 TO 35	U-1 TO U-7	UTILITIES
36 TO 38	SC-1 TO SC-3	STAGE CONSTRUCTION
39 TO 49	TH-1 TO TH-11	TRAFFIC HANDLING
50	THQ-1	TRAFFIC HANDLING QUANTITIES
51 TO 54	SS-1 TO SS-4	SIGNAGE AND STRIPING
55	PDQ-1	PAVEMENT DELINEATION QUANTITIES
56 TO 58	Q-1 TO Q-3	QUANTITIES
59 TO 70	E-1 TO E-12	ELECTRICAL PLAN
71 TO 76	LS-1 TO LS-6	LANDSCAPE PLAN

60% SUBMITTAL

JOB NO.	
XX-XX	CITY OF RIDGECREST W. RIDGECREST BOULEVARD RECONSTRUCTION TITLE SHEET

REGISTERED PROFESSIONAL ENGINEER — ROBERT A. HIMES — No. 45787 — Exp. 12/31/10 — CIVIL — STATE OF CALIFORNIA

MARK THOMAS & COMPANY, INC.
7571 N REMINGTON AVENUE, SUITE 102
FRESNO, CALIFORNIA 93720
(559) 447-1938 FAX: (559) 447-8586
WWW.MARKTHOMAS.COM
MTCO JOB NUMBER: FN-09105

DATE: 05/26/2010
SCALE:
DRAWN BY: MB/KS/CG
CK'D BY: EAN
DATE CK'D:

Revisions	Checked By	Date Checked

SHEET NO. 1
T-1
OF 76 SHEETS

CAD USER: ksmith
PLOT DATE: Jun 02, 2010–08:11:39am
FILE NAME: RCB_S-1
PATH: V:\Ridgecrest - FN-09105 - Ridgecrest Blvd\CADD\Drawing\

LEGEND

- △ FOUND MONUMENT – HORIZONTAL
- ⊙ FOUND MONUMENT – VERTICAL
- (No) CONTROL POINT NUMBER
- • FOUND MONUMENT

NOTES:

1. FOR COMPLETE PROJECT CONTROL AND MONUMENTATIN DATA, SEE THE SURVEY RECORDS ON FILE IN THE CURVEY DEPARTMENT AT THE DISTRIC OFFICE.
2. CONTRACTOR SHALL COMPLY WITH BUSINESS AND PROFESSIONS CODE SECTION 8771(b) REGARDING REFERENCING, PRESERVING, AND RECONSTRUCTING MONUMENTS, WHETHER OR NOT MONUMENTS ARE SHOWN IN THESE PLANS.
3. IF MONUMENT IS DAMAGED BY CONTRACTOR'S OPERATIONS, CONTRACTOR SHALL REPLACE AT CONTRACTOR'S COST.

DATUM

NORTH AMERICAN VERTICAL DATUM 29 BASED ON RIDGECREST BENCHMARKS – BM 21, 95, 96, &104. CCS83, ZONE 5 EPOCH 2002.00 AS DERIVED FROM OPUS.

LINE TABLE

LINE No.	LENGTH	BEARING
1	3120.77'	N 89°52'18" E
2	2667.43'	N 89°53'12" E
3	1828.22'	N 89°46'19" E
4	833.50'	N 89°49'34" E

CURVE TABLE

CURVE No.	RADIUS	DELTA	TANGENT	LENGTH
1	3000.00'	2°00'06"	52.41'	104.80'
2	3000.00'	1°53'13"	49.41'	98.81'
3	3000.00'	2°51'05"	74.66'	149.30'
4	3000.00'	2°47'50"	73.24'	146.46'

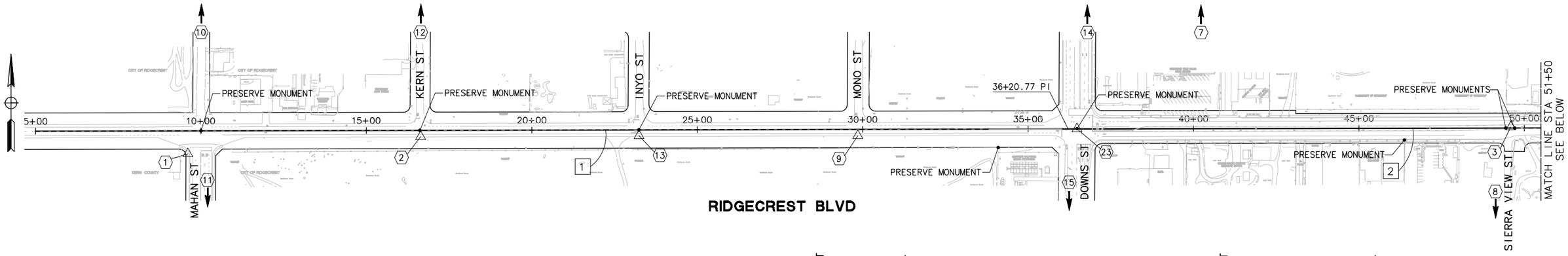

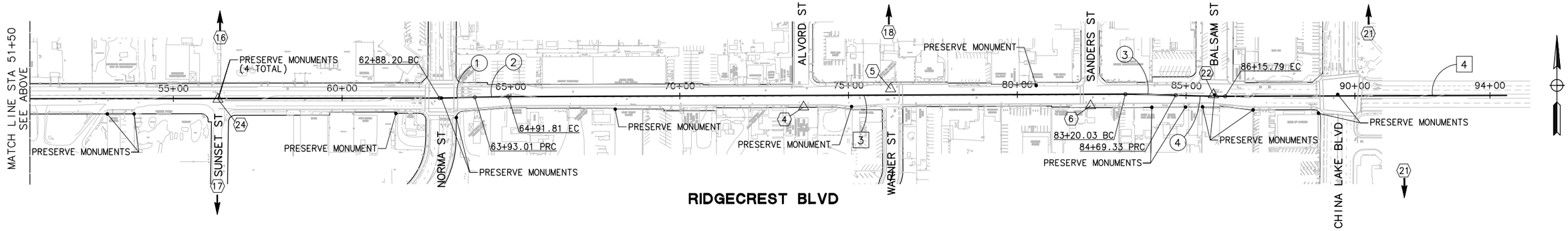

SURVEY CONTROL TABLE

No.	POINT No.	NORTHING	EASTING	ELEVATION	DESCRIPTION	APPROX. LOCATION
1	1000	2412966.74	6651780.47	2319.86	CUT X	9+60.19, 69.50 Rt
2	1001	2413018.79	6652484.09	2349.39	MAG NAIL & SHINER	16+63.93, 19.03 Rt
3	1002	2413047.95	6655779.52	2321.10	PK & SHINER	49+59.41, 3.10 Lt
4	1003	2413020.77	6658187.06	2302.92	CUT X	73+66.87, 34.25 Rt
5	1004	2413074.61	6658444.79	2300.59	PK & SHINER	76+24.81, 18.57 Lt
6	1005	2413024.48	6659036.90	2295.41	CUT X	82+16.72, 33.92 Rt
7	1010	2415374.35	6654839.73	————	BRASS TAG	APPROX 2331 FEET NORTH OF RIDGECREST BLVD AND 360' EAST OF DOWNS ST
8	1011	2410183.87	6655738.44	————	100d NAIL	APPROX 2861 FEET SOUTH OF RIDGECREST BLVD AND 1292' EAST OF DOWNS ST
9	1015	2413021.74	6653805.67	2335.81	PK & SHINER	29+85.51, 19.03 Rt
10	2001	2414054.56	6651832.85	2337.87	PK & SHINER	10+15.01, 1018.2 Lt
11	2002	2412566.80	6651847.67	2359.81	MAG NAIL & SHINER	10+26.50, 469.6 Rt
12	2003	2413730.49	6652486.09	————	PK & SHINER	16+67.52, 692.7 Lt
13	2004	2413021.54	6653144.16	2344.02	MAG NAIL & SHINER	23+24, 17.75 Rt
14	2005	2413597.11	6654511.39	2324.91	MAG NAIL & SHINER	36+92.37, 554.77 Lt
15	2006	2412373.32	6654444.34	2330.10	PK & SHINER	36+22.90, 668.88 Rt
16	2007	2413532.74	6656458.35	————	MAG NAIL & SHINER	56+39.20, 486.55 Lt
17	2008	2412668.46	6656448.45	————	MAG NAIL & SHINER	56+27.59, 377.71 Rt
18	2009	2413314.52	6658439.11	————	MAG NAIL & SHINER	76+20.09, 258.50 Rt
19	2010	2412517.12	6658433.52	————	MAG NAIL & SHINER	76+11.32, 538.88 Rt
20	2011	2413536.27	6659859.14	2290.14	SURVEY SPIKE	90+40.66, 482.42 Lt
21	2012	2412398.77	6659968.50	2285.05	NAIL & WASHER	91+46.56, 655.40 Rt
22	2013	2413057.19	6659401.13	2292.32	SURVEY SPIKE	85.81.14, 4.53 Lt
23	3003	2413042.25	6654468.07	2326.31	MONUMENT WELL	36+48.06, 0.20 Rt
24	3004	2413043.90	6656452.20	2315.43	SURVEYOR	56+32.08, 2.28 Rt
25	BM25			2327.699	CHRIS BOX TC	
26	BM26			2311.52	CHRIS BOX TC	
27	BM27			2302.28	CHRIS BOX TC	
28	MB104			2338.70	RR SPIKE	

JOB NO. XX-XX

CITY OF RIDGECREST
W. RIDGECREST BOULEVARD RECONSTRUCTION
SURVEY CONTROL DIAGRAM

REGISTERED PROFESSIONAL ENGINEER — ROBERT A. HIMES — No. 45787 — Exp. 12/31/10 — CIVIL — STATE OF CALIFORNIA

MARK THOMAS & COMPANY, INC.
7571 N REMINGTON AVENUE, SUITE 102
FRESNO, CALIFORNIA 93720
(559) 447-1938 FAX: (559) 447-8586
WWW.MARKTHOMAS.COM
MTCO JOB NUMBER: FN-09105

DATE: 05/26/2010
SCALE:
DRAWN BY: MB/KS/GC
CK'D BY: EAN
DATE CK'D:

Revisions	Checked By	Date Checked

SHEET NO. 2
S-1
OF 76 SHEETS

CAD USER: ksmith
PLOT DATE: Jun 02, 2010-08:11:44am
FILE NAME: RCB_X-1-X-4
PATH: V:\Ridgecrest - FN-09105 - Ridgecrest Blvd\CADD\Drawing\

DESIGN DESIGNATION

RIDGECREST BLVD TI VALUE = 10

NOTE: EXISTING PAVEMENT SECTIONS SHOWN ARE BASED ON AS-BUILTS AND ARE SUBJECT TO VARIATION DUE TO CONSTRUCTION TOLERANCES AND MAINTENANCE ACTIVITIES (i.e. OVERLAYS). THE CONTRACTOR IS CAUTIONED THAT ONLY ACTUAL EXCAVATION WILL REVEAL THE ACTUAL DEPTH AND EXTENT OF THE ROADWAY STRUCTURAL SECTION.

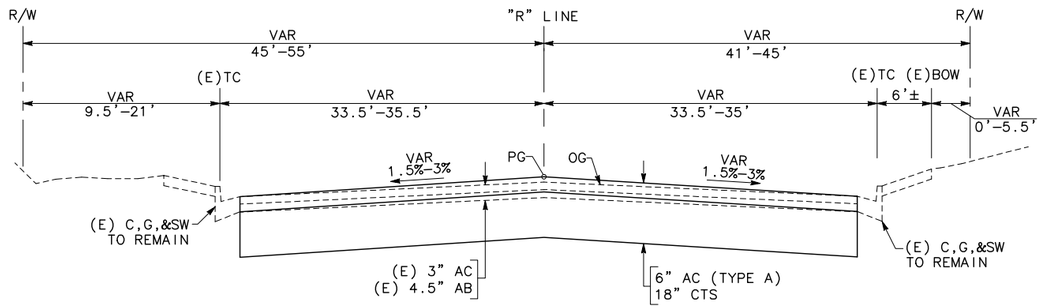

RIDGECREST BOULEVARD

STA 37+23 TO 41+69
STA 42+25 TO 42+64
STA 43+07 TO 48+04
STA 56+84 TO 60+36
STA 61+03 TO 61+89

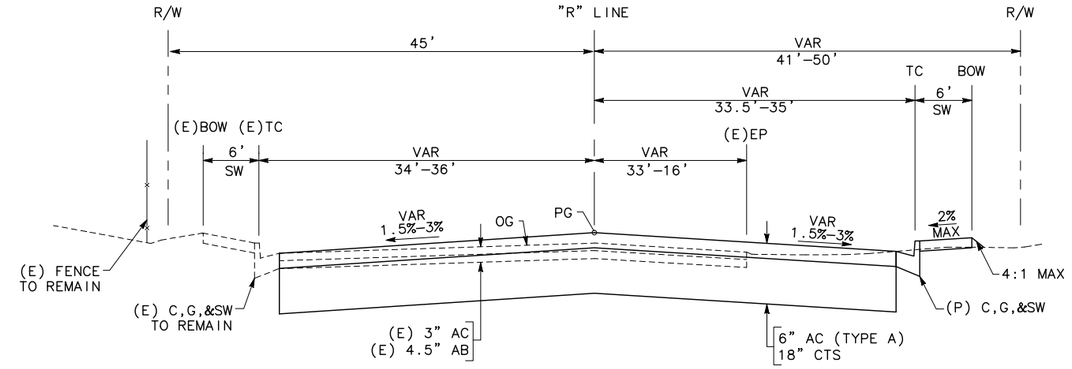

RIDGECREST BOULEVARD

STA 49+20 TO 56+84
STA 60+36 TO 61+03

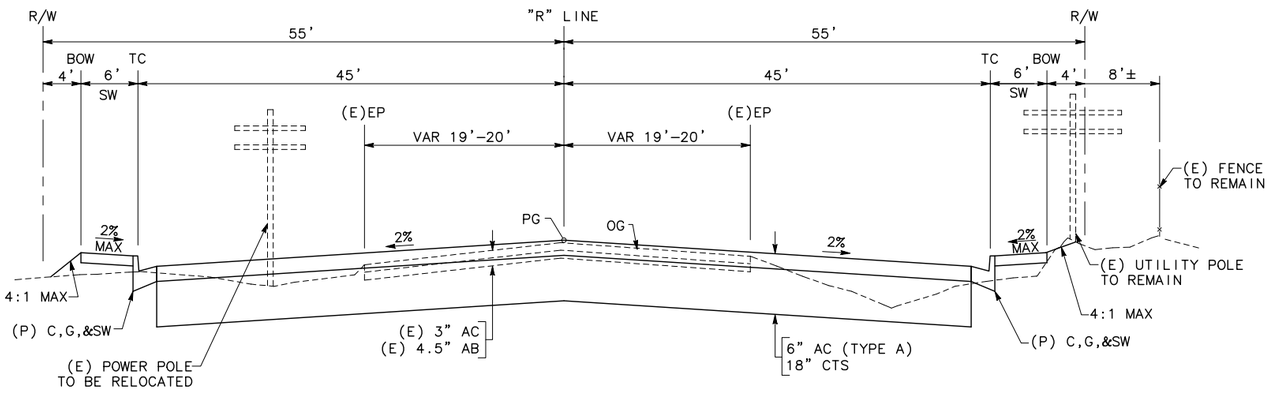

RIDGECREST BOULEVARD

STA 10+00 TO 37+23

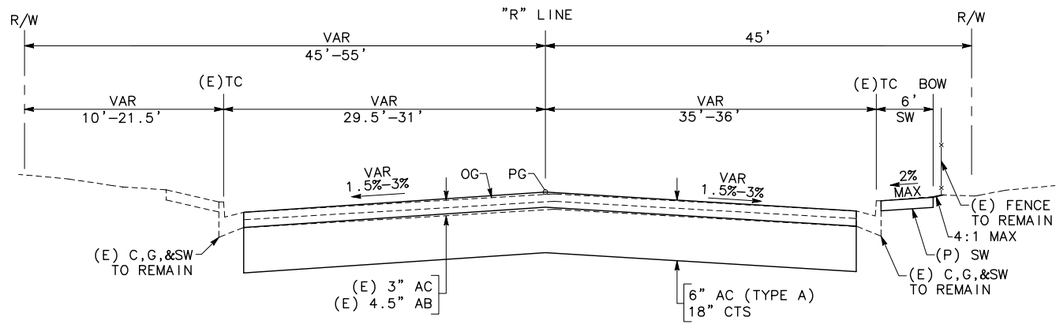

RIDGECREST BOULEVARD

STA 41+69 TO 42+25
STA 42+64 TO 43+07
STA 48+04 TO 49+20

JOB NO.	CITY OF RIDGECREST W. RIDGECREST BOULEVARD RECONSTRUCTION TYPICAL CROSS SECTIONS	REGISTERED PROFESSIONAL ENGINEER ROBERT A. HIMES No. 45787 Exp. 12/31/10 CIVIL STATE OF CALIFORNIA	MARK THOMAS & COMPANY, INC. 7571 N REMINGTON AVENUE, SUITE 102 FRESNO, CALIFORNIA 93720 (559) 447-1938 FAX: (559) 447-8586 WWW.MARKTHOMAS.COM MTCO JOB NUMBER: FN-09105	DATE: 05/26/2010 SCALE: DRAWN BY: MB/KS/CC CK'D BY: EAN DATE CK'D:

Revisions	Checked By	Date Checked

SHEET NO. 3

X-1

OF 76 SHEETS

PLOT DATE: Jun 02, 2010-08:11:45am CAD USER: ksmith
FILE NAME: RCB_X-1-X-4
PATH: V:\Ridgecrest - FN-09105 - Ridgecrest Blvd\CADD\Drawing\

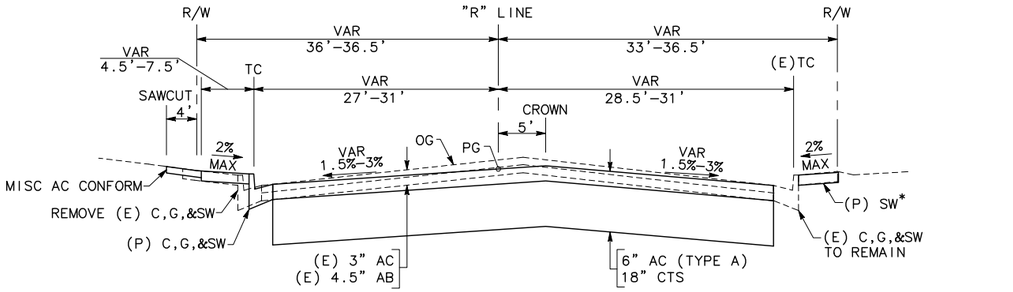

* SEE LAYOUT SHEETS FOR BEG AND END OF SW.

RIDGECREST BOULEVARD

STA 64+35 TO 66+08
STA 66+59 TO 68+40
STA 70+89 TO 71+69

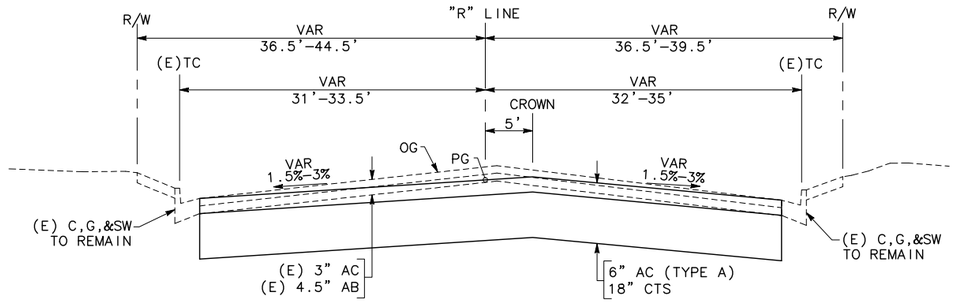

RIDGECREST BOULEVARD

STA 62+28 TO 64+35

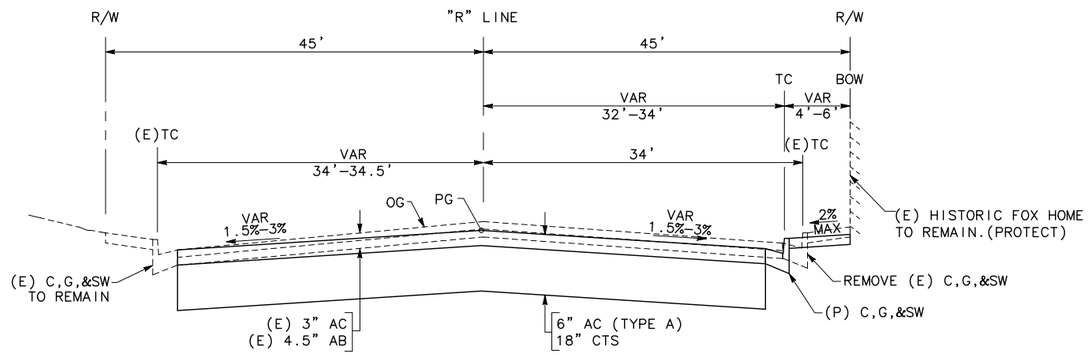

RIDGECREST BOULEVARD

STA 61+89 TO 62+28

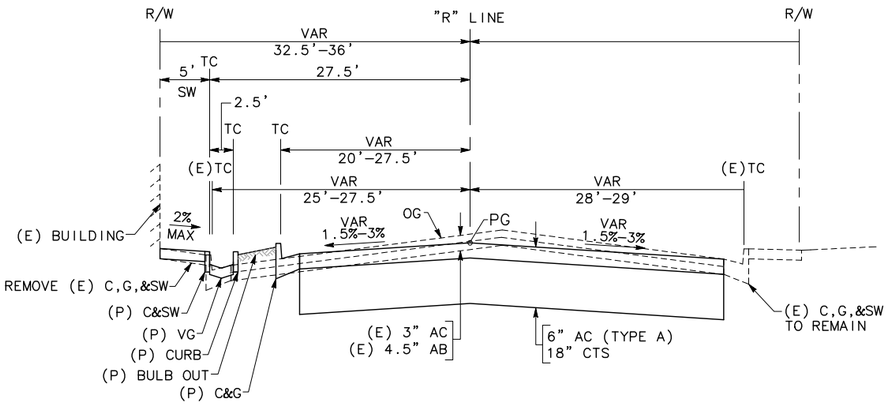

RIDGECREST BOULEVARD

STA 73+14 TO 73+84
STA 81+54 TO 82+00

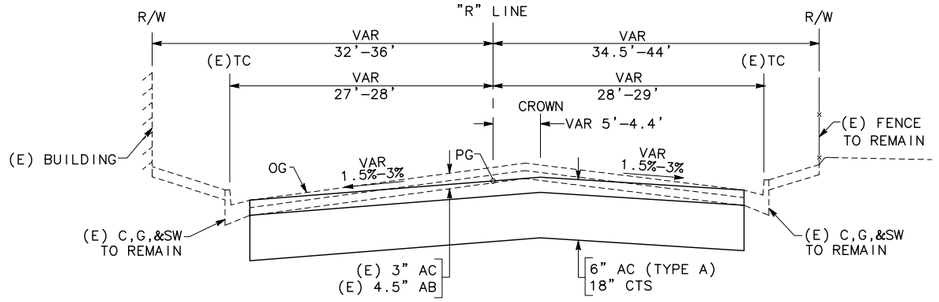

RIDGECREST BOULEVARD

STA 69+41 TO 70+89
STA 71+69 TO 73+14

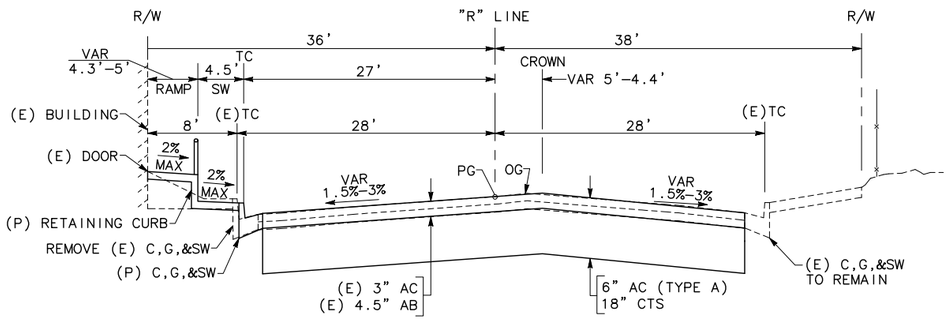

RIDGECREST BOULEVARD

STA 66+08 TO 66+59
STA 68+40 TO 69+41

JOB NO.	CITY OF RIDGECREST W. RIDGECREST BOULEVARD RECONSTRUCTION TYPICAL CROSS SECTIONS	ROBERT A. HIMES No. 45787 Exp. 12/31/10 CIVIL STATE OF CALIFORNIA	MARK THOMAS & COMPANY, INC. 7571 N REMINGTON AVENUE, SUITE 102 FRESNO, CALIFORNIA 93720 (559) 447-1938 FAX: (559) 447-8586 WWW.MARKTHOMAS.COM MTCO JOB NUMBER: FN-09105	DATE: 05/26/2010 SCALE: DRAWN BY: MB/KS/CG CK'D BY: EAN DATE CK'D:

Revisions	Checked By	Date Checked

SHEET NO. 4
X-2
OF 76 SHEETS

FILE NAME: RCB_X-1-X-4
PLOT DATE: Jun 02, 2010-08:11:47am
CAD USER: ksmith
PATH: V:\Ridgecrest - FN-09105 - Ridgecrest Blvd\CADD\Drawing\

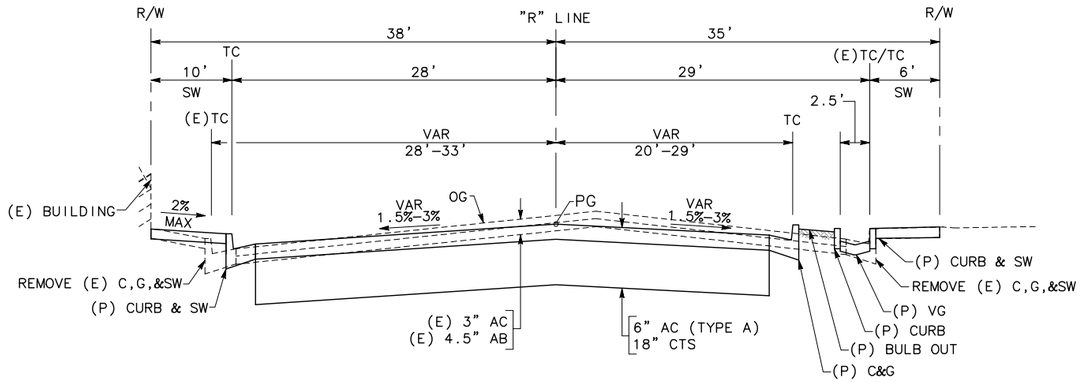

RIDGECREST BOULEVARD
STA 75+73 TO 76+87

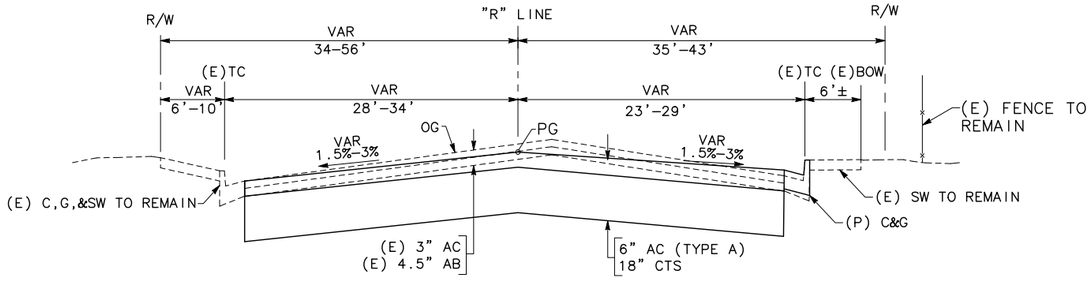

RIDGECREST BOULEVARD
STA 83+95 TO 85+14

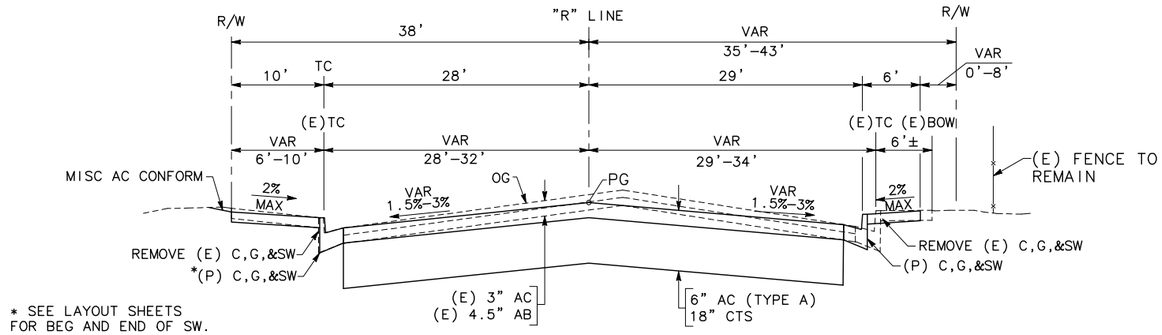

* SEE LAYOUT SHEETS
FOR BEG AND END OF SW.

RIDGECREST BOULEVARD
STA 73+84 TO 75+73

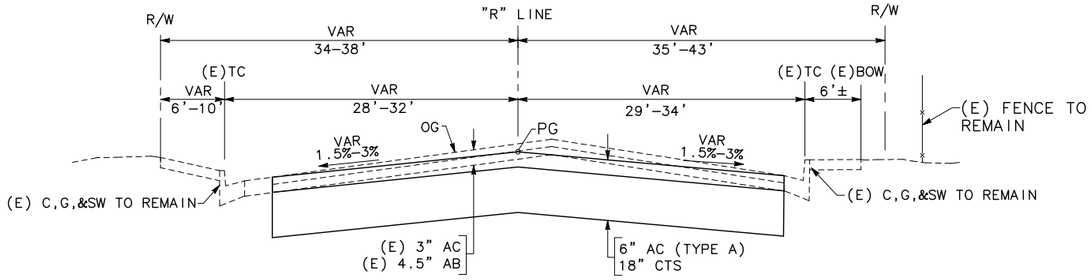

RIDGECREST BOULEVARD
STA 83+01 TO 83+95

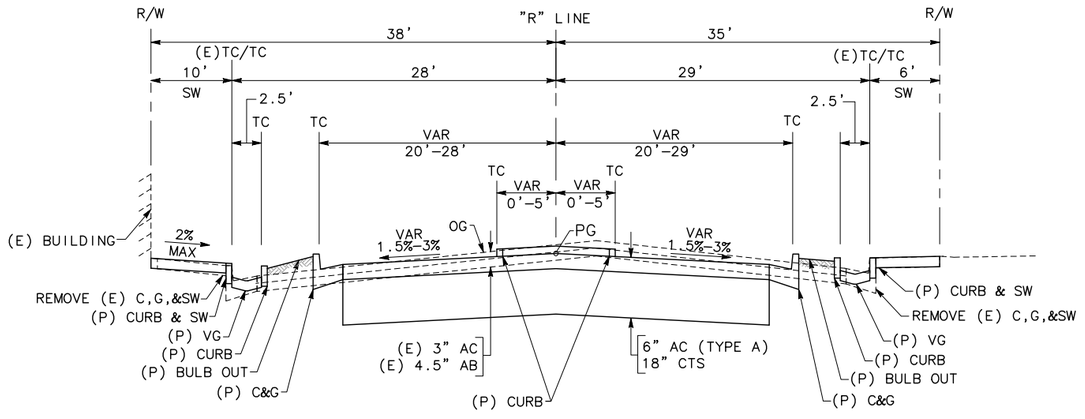

RIDGECREST BOULEVARD
STA 73+84 TO 74+46
STA 82+00 TO 83+01

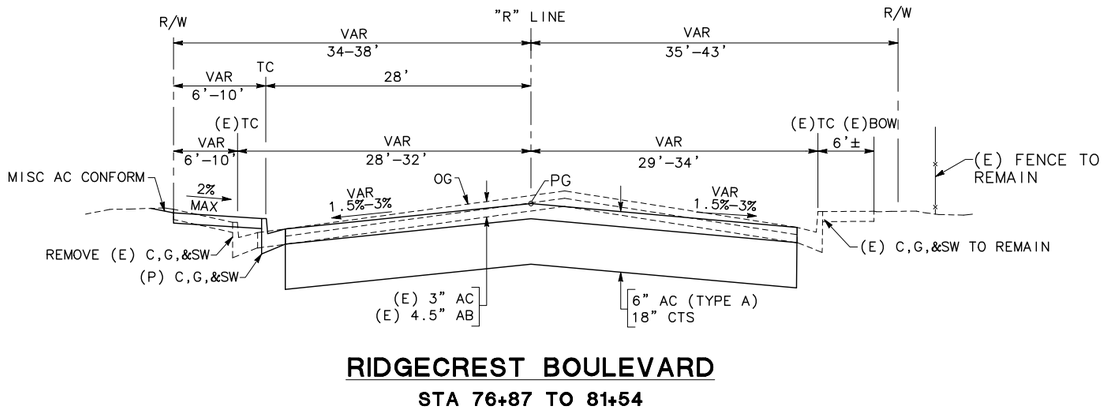

RIDGECREST BOULEVARD
STA 76+87 TO 81+54

JOB NO.	CITY OF RIDGECREST W. RIDGECREST BOULEVARD RECONSTRUCTION TYPICAL CROSS SECTIONS	ROBERT A. HIMES, No. 45787, Exp. 12/31/10, CIVIL, STATE OF CALIFORNIA	MARK THOMAS & COMPANY, INC. 7571 N REMINGTON AVENUE, SUITE 102 FRESNO, CALIFORNIA 93720 (559) 447-1938 FAX: (559) 447-8586 WWW.MARKTHOMAS.COM MTCO JOB NUMBER: FN-09105	DATE: 05/26/2010 SCALE: DRAWN BY: MB/KS/CG CK'D BY: EAN DATE CK'D:

Revisions	Checked By	Date Checked	SHEET NO. 5
			X-3
			OF 76 SHEETS

CAD USER: ksmith
PLOT DATE: Jun 02, 2010-08:11:48am
FILE NAME: RCB_X-1-X-4
PATH: V:\Ridgecrest - FN-09105 - Ridgecrest Blvd\CADD\Drawing\

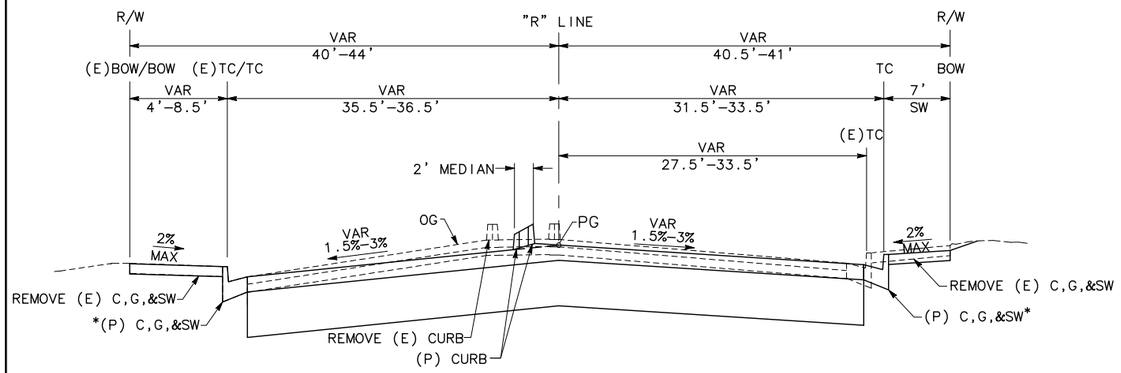

* SEE LAYOUT SHEETS FOR BEG AND END OF SW.

* SEE LAYOUT SHEETS FOR BEG AND END OF SW.

RIDGECREST BOULEVARD

STA 86+36 TO 88+96

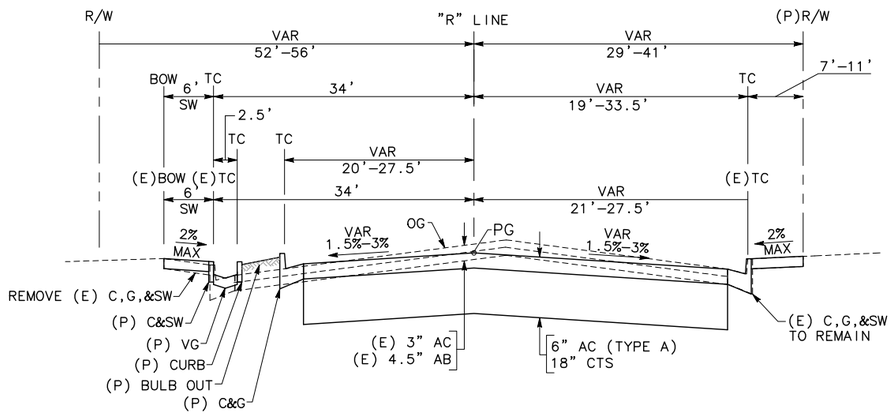

RIDGECREST BOULEVARD

STA 85+14 TO 86+36

JOB NO.	CITY OF RIDGECREST W. RIDGECREST BOULEVARD RECONSTRUCTION TYPICAL CROSS SECTIONS			DATE: 05/26/2010 SCALE: DRAWN BY: MB/KS/GC CK'D BY: EAN DATE CK'D:	Revisions	Checked By	Date Checked	SHEET NO. 6 X-4 OF 76 SHEETS
XX-XX		REGISTERED PROFESSIONAL ENGINEER ROBERT A. HIMES No. 45787 Exp. 12/31/10 CIVIL STATE OF CALIFORNIA	MARK THOMAS & COMPANY, INC. 7571 N REMINGTON AVENUE, SUITE 102 FRESNO, CALIFORNIA 93720 (559) 447-1938 FAX: (559) 447-8586 WWW.MARKTHOMAS.COM MTCO JOB NUMBER: FN-09105					

CAD USER: ksmith
PLOT DATE: Jun 02, 2010-08:11:51am
FILE NAME: RCB_D-1-D-2
PATH: V:\Ridgecrest - FN-09105 - Ridgecrest Blvd\CADD\Drawing\

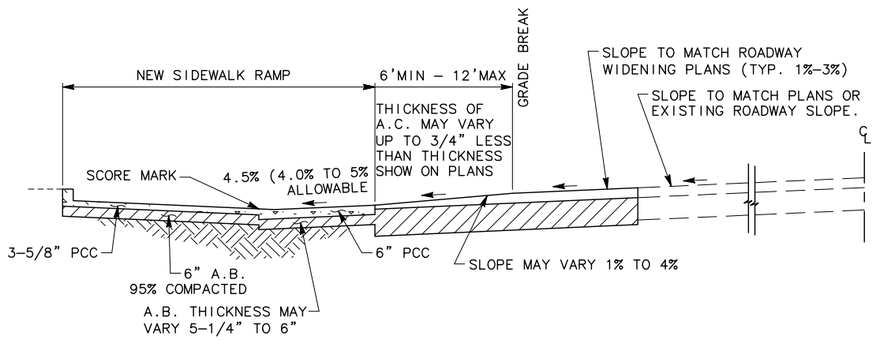

SECTION A - A

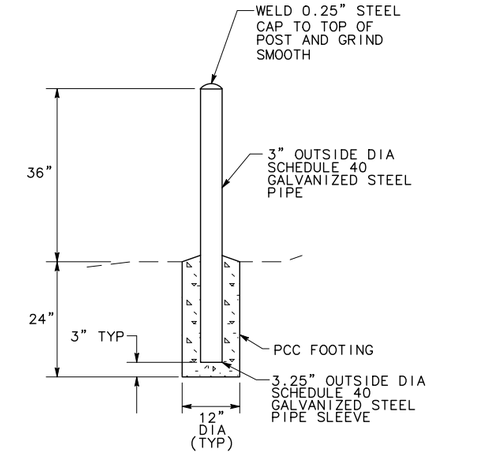

PIPE BOLLARD
NTS 2

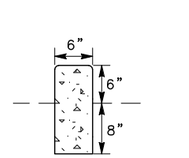

TYPE 3
NTS 4

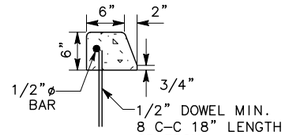

TYPE 4 & 4A
NTS 5

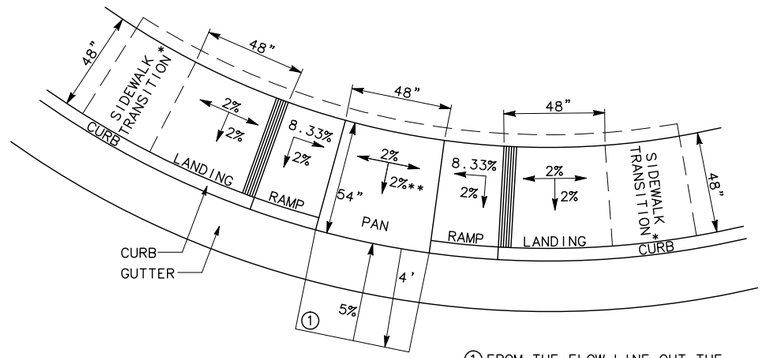

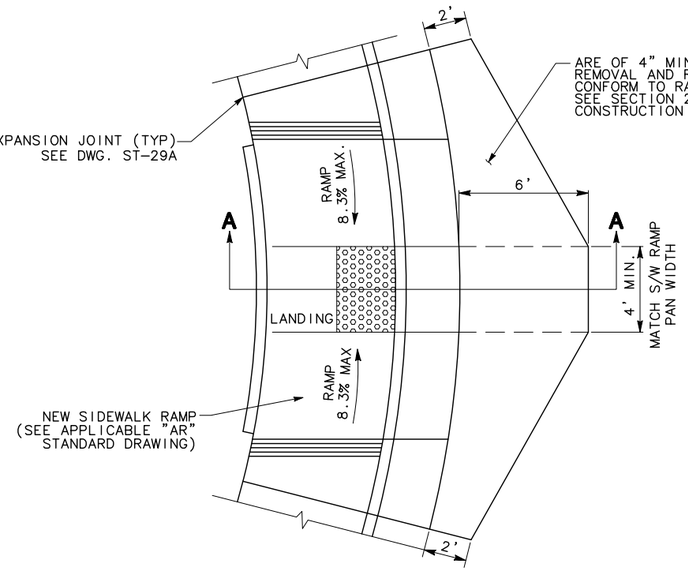

CONSTRUCTION OF NEW SIDEWALK RAMP IN EXISTING PAVED AREA
NTS 1

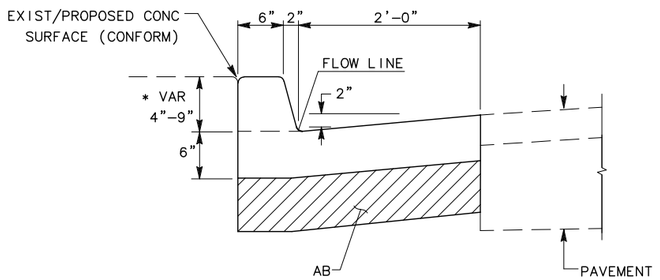

* VARY CURB HEIGHT TO CONFORM TOP OF CURB TO EXIST CONCRETE SURFACE

MODIFIED CURB & GUTTER No. 1
NTS 3

NOTES

A. ALL SLOPES SHOWN ARE MAXIMUMS
B. ALL DIMENSIONS SHOWN ARE MINIMUMS
C. ALL PANS MUST BE LOCATED INSIDE CROSSWALKS OR IN FRONT OF STOP BARS
D. DETECTABLE WARNING IS PLACED IN THE PAN AND AS PER DRAWING AR – 3.2.
E. ALL JOINTS BETWEEN ELEMENTS ARE RADIAL.
F. SINGLE RAMPS CAN BE CONSTRUCTED ON A TANGENT.
* CONSTRUCTED IF REQUIRED BY EXISTING CONDITIONS
** MAXIMUM SLOPE OF 2% TO 1% FROM BACK OF PAN TO FLOW LINE
— — DESIGNATES IN PLAN VIEWS THAT ELEMENT MAY BE CONSTRUCTED

SINGLE PAN CURB RAMPS
NTS 6

JOB NO.	CITY OF RIDGECREST W. RIDGECREST BOULEVARD RECONSTRUCTION ROADWAY DETAILS		MARK THOMAS & COMPANY, INC. 7571 N REMINGTON AVENUE, SUITE 102 FRESNO, CALIFORNIA 93720 (559) 447-1938 FAX: (559) 447-8586 WWW.MARKTHOMAS.COM MTCO JOB NUMBER: FN-09105	DATE: 05/26/2010 SCALE: DRAWN BY: MB/KS/CG CK'D BY: EAN DATE CK'D:
XX-XX				

Revisions	Checked By	Date Checked

SHEET NO. 7
D-1
OF 76 SHEETS

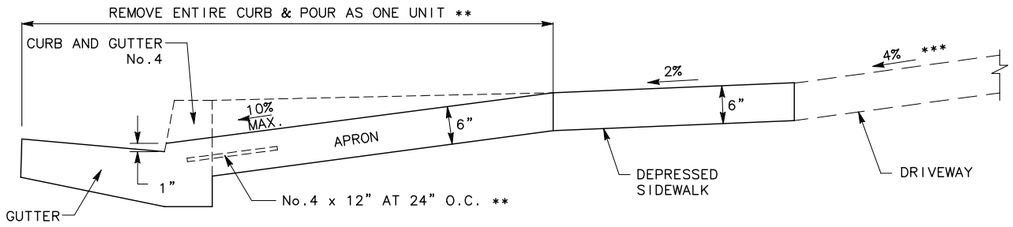

SECTION A-A WITH VERTICAL CURB

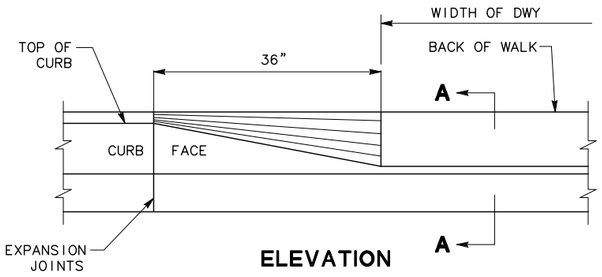

ELEVATION

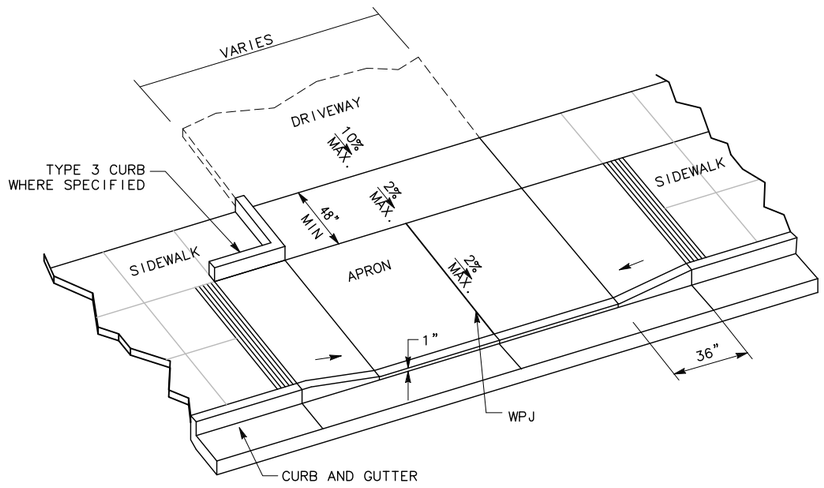

PLAN

DRIVEWAY DETAIL

NTS

7

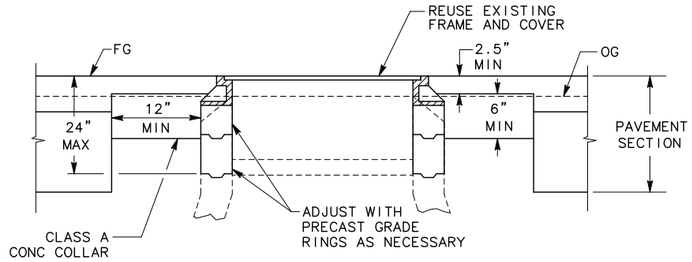

ADJUST MANHOLE TO GRADE DETAIL

NTS

8

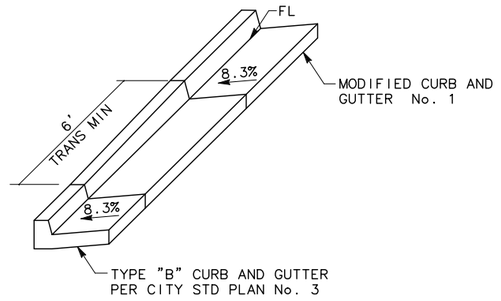

CURB & GUTTER TRANSITION DETAIL

NTS

10

JOB NO.	CITY OF RIDGECREST W. RIDGECREST BOULEVARD RECONSTRUCTION ROADWAY DETAILS	REGISTERED PROFESSIONAL ENGINEER ROBERT A. HIMES No. 45787 Exp. 12/31/10 CIVIL STATE OF CALIFORNIA	MARK THOMAS & COMPANY, INC. 7571 N REMINGTON AVENUE, SUITE 102 FRESNO, CALIFORNIA 93720 (559) 447-1938 FAX: (559) 447-8586 WWW.MARKTHOMAS.COM MTCO JOB NUMBER: FN-09105	DATE: 05/26/2010 SCALE: DRAWN BY: MB/KS/GC CK'D BY: EAN DATE CK'D:	Revisions	Checked By	Date Checked	SHEET NO. 8 D-2 OF 76 SHEETS
XX-XX								

PATH: V:\Ridgecrest - FN-09105 - Ridgecrest Blvd\CADD\Drawing\
FILE NAME: RCB_D-1-D-2
PLOT DATE: Jun 02, 2010-08:11:52am
CAD USER: ksmith

CONSTRUCTION NOTES

1. CONSTRUCT TYPE "B" 6" CURB AND GUTTER PER CITY OF RIDGECREST STANDARD PLAN No. 3.
2. CONSTRUCT TYPE "A" 8" CURB AND GUTTER PER CITY OF RIDGECREST STANDARD PLAN No. 3.
3. CONSTRUCT MODIFIED CURB & GUTTER PER DETAIL ON SHEET D-1.
4. CONSTRUCT TYPE 4 CURB PER DETAIL ON SHEET D-1.
5. CONSTRUCT TYPE 3 CURB PER DETAIL ON SHEET D-1.
6. CONSTRUCT CROSS - GUTTER & APRON PER CITY OF RIDGECREST STANDARD PLAN No. 7
7. CONSTRUCT SIDEWALK PER CITY OF RIDGECREST STANDARD PLAN No. 4.
8. CONSTRUCT COMMERCIAL DRIVEWAY PER CITY OF RIDGECREST STANDARD PLAN NO. 5.
9. CONSTRUCT COMMERCIAL DRIVEWAY PER DETAIL ON SHEET D-2.
10. CONSTRUCT WHEELCHAIR RAMP PER CITY OF RIDGECREST STANDARD PLAN NO. 6 WITH TRUNCATED DOME.
11. CONSTRUCT DUAL PAN CURB RAMPS PER DETAIL ON SHEET D-1.
12. RELOCATE EXISTING MAILBOX.
13. CONSTRUCT FENCE.

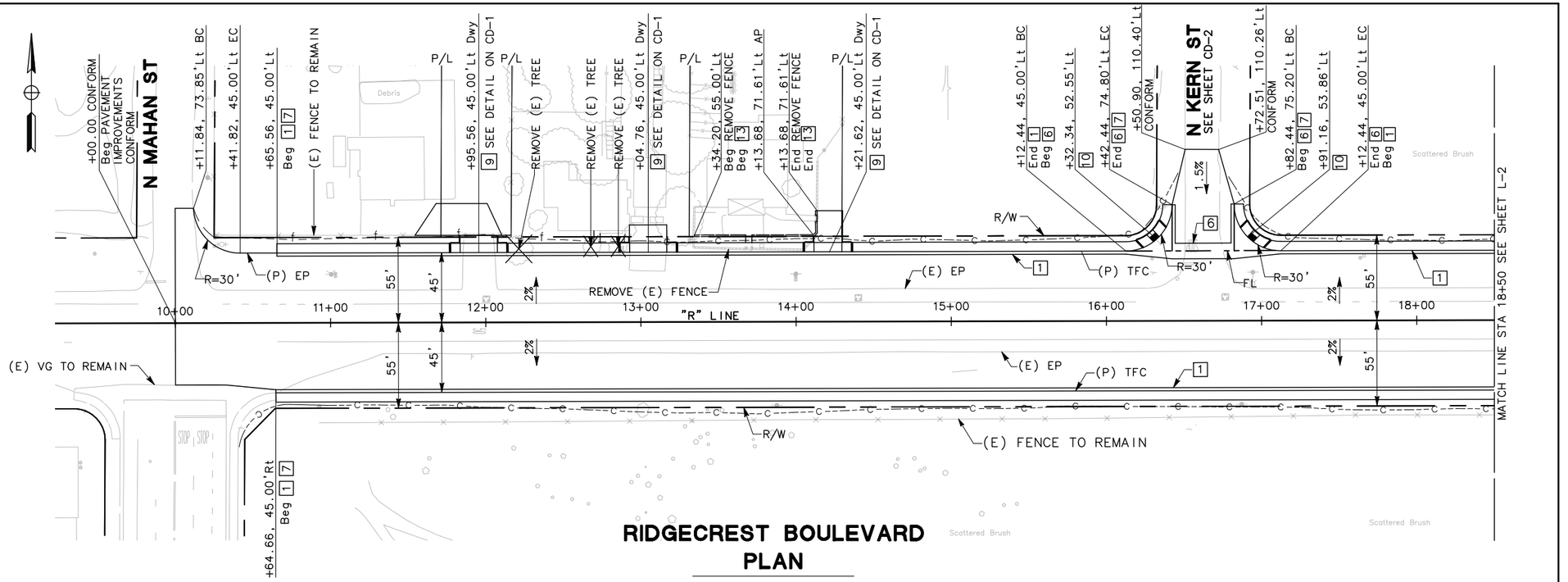

RIDGECREST BOULEVARD PLAN

SCALE: 1"= 40'

GENERAL NOTES

1. STATION AND OFFSET CALLOUTS ARE TO THE FACE OF CURB.
2. FOR UTILITY WORK, SEE U-SHEETS.
3. FOR ELECTRICAL WORK, SEE E-SHEETS.
4. FOR LANDSCAPE WORK, SEE L-SHEETS.
5. FOR CONTROL LINE & MONUMENT INFORMATION, SEE SHEET S-1.

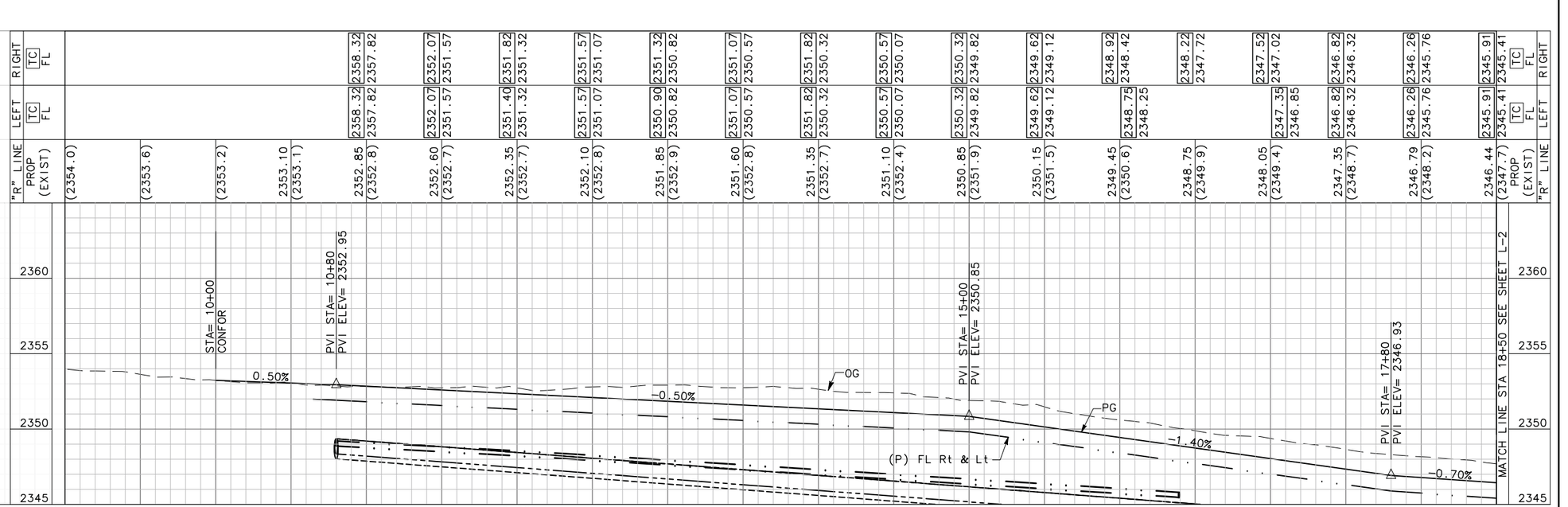

PROFILE

SCALE H: 1"= 40'
V: 1"= 4'

JOB NO.	CITY OF RIDGECREST W. RIDGECREST BOULEVARD RECONSTRUCTION LAYOUT 10+00 TO 18+50	ROBERT A. HIMES No. 45787 Exp. 12/31/10 CIVIL STATE OF CALIFORNIA	MARK THOMAS & COMPANY, INC. 7571 N REMINGTON AVENUE, SUITE 102 FRESNO, CALIFORNIA 93720 (559) 447-1938 FAX: (559) 447-8586 WWW.MARKTHOMAS.COM MTCO JOB NUMBER: FN-09105	DATE: 05/26/2010 SCALE: DRAWN BY: MB/KS/CC CK'D BY: EAN DATE CK'D:	Revisions	Checked By	Date Checked	SHEET NO. 9 L-1 OF 76 SHEETS
XX-XX								

CAD USER: ksmith
PLOT DATE: Jun 02, 2010-08:11:59am
FILE NAME: RCB_L-1-L-7
PATH: V:\Ridgecrest - FN-09105 - Ridgecrest Blvd\CADD\Drawing\

FILE NAME: RCB_L-1-L-7
PLOT DATE: Jun 02, 2010-08:12:02am
CAD USER: ksmith
PATH: V:\Ridgecrest - FN-09105 - Ridgecrest Blvd\CADD\Drawing\

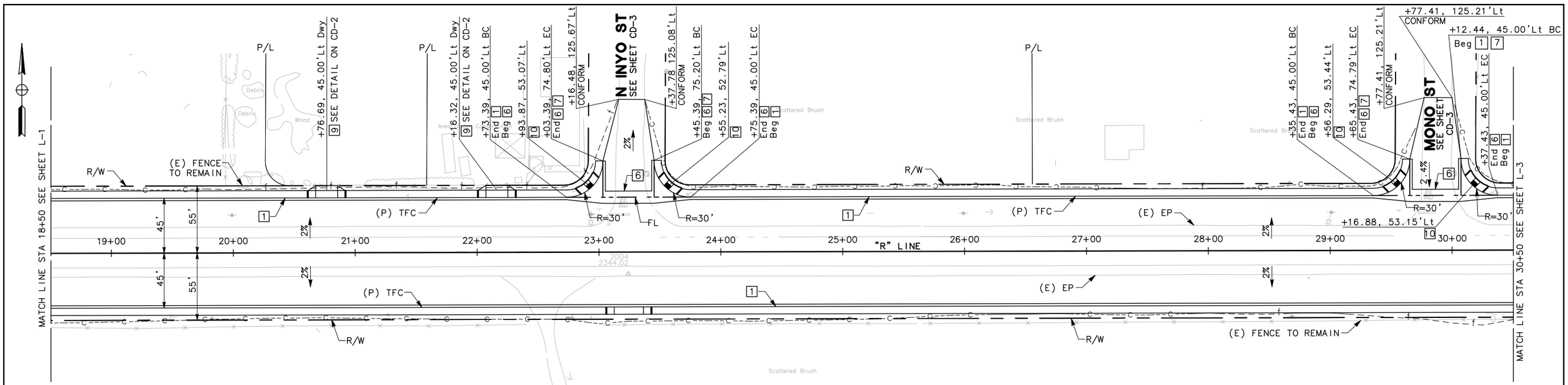

RIDGECREST BOULEVARD
PLAN

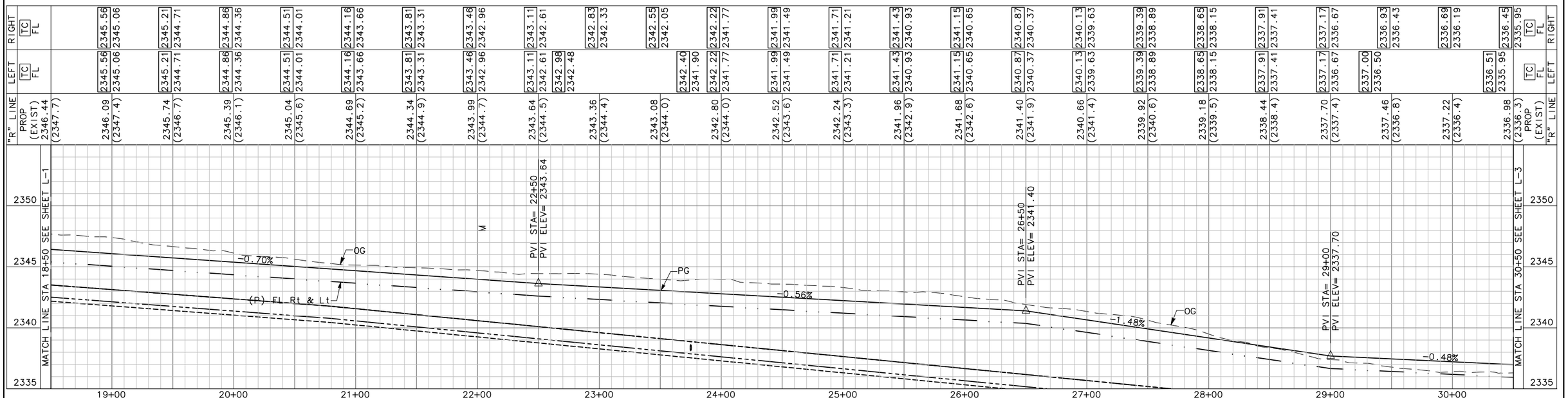

PROFILE

SCALE H: 1"= 40'
V: 1"= 4'

JOB NO.	CITY OF RIDGECREST W. RIDGECREST BOULEVARD RECONSTRUCTION LAYOUT 18+50 TO 30+50	
XX-XX		

REGISTERED PROFESSIONAL ENGINEER — ROBERT A. HIMES — No. 45787 — Exp. 12/31/10 — CIVIL — STATE OF CALIFORNIA

MARK THOMAS & COMPANY, INC.
7571 N REMINGTON AVENUE, SUITE 102
FRESNO, CALIFORNIA 93720
(559) 447-1938 FAX: (559) 447-8586
WWW.MARKTHOMAS.COM
MTCO JOB NUMBER: FN-09105

DATE: 05/26/2010
SCALE:
DRAWN BY: MB/KS/CG
CK'D BY: EAN
DATE CK'D:

Revisions	Checked By	Date Checked

SHEET NO. 10

L-2

OF 76 SHEETS

CAD USER: ksmith
PLOT DATE: Jun 02, 2010-08:12:05am
FILE NAME: RCB_L-1-L-7
PATH: V:\Ridgecrest - FN-09105 - Ridgecrest Blvd\CADD\Drawing\

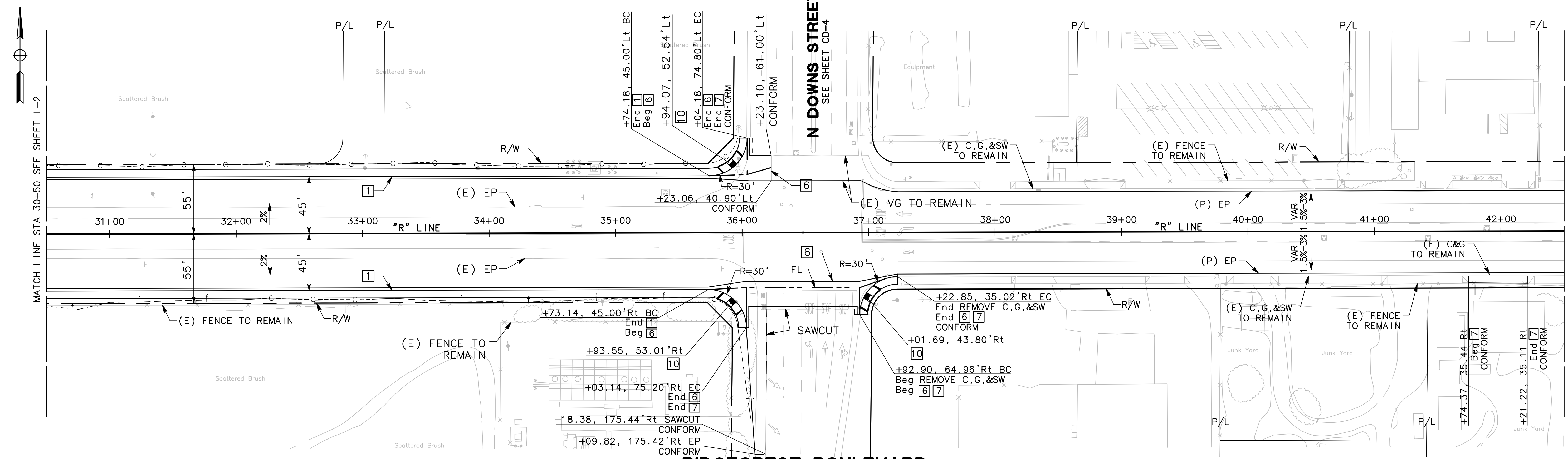

RIDGECREST BOULEVARD PLAN

SCALE: 1"= 40'

RIGHT TC / FL		2336.21 / 2335.71	2335.97 / 2335.47	2335.73 / 2335.23	2334.99 / 2334.49	2334.25 / 2333.75	2333.51 / 2333.01	2332.77 / 2332.27	2331.52 / 2331.02	2330.27 / 2329.77	2329.19 / 2328.69	2328.69 / 2328.19	
LEFT TC / FL		2336.21 / 2335.71	2335.97 / 2335.47	2335.73 / 2335.23	2334.99 / 2334.49	2334.25 / 2333.75	2333.51 / 2333.01	2332.77 / 2332.27	2331.52 / 2331.02	2330.27 / 2329.77	23XX.XX / 2328.88	23XX.XX / 2328.45	
"R" LINE PROP (EXIST)	2336.98 (2336.3)	2336.74 (2336.4)	2336.50 (2336.7)	2336.26 (2336.5)	2335.52 (2336.0)	2334.78 (2335.1)	2334.04 (2334.2)	2333.30 (2332.8)	2332.05 (2331.8)	2330.80 (2330.9)	2330.03 (2330.1)		2329.25 (2328.9)

RIGHT TC / FL			2327.27 / 2326.66											
LEFT TC / FL														
"R" LINE PROP (EXIST)	2328.48 (2328.3)	2327.70 (2328.1)		2326.93 (2327.7)	2326.48 (2326.9)	2326.03 (2326.2)	2325.58 (2325.5)	2325.13 (2325.1)	2324.53 (2324.4)	2323.93 (2323.6)	2323.33 (2322.9)	2322.73 (2322.3)	2322.13 (2322.0)	2321.70 (2321.6)

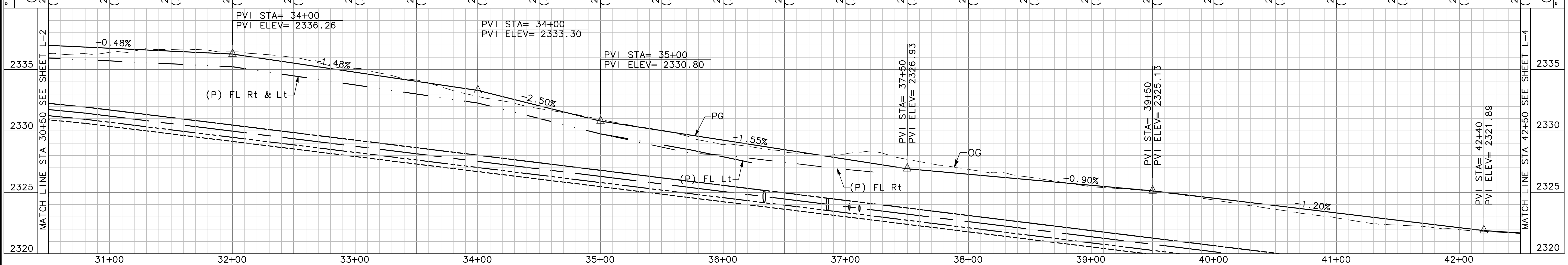

PROFILE

SCALE H: 1"= 40'
V: 1"= 4'

JOB NO. XX-XX

CITY OF RIDGECREST
W. RIDGECREST BOULEVARD RECONSTRUCTION
LAYOUT 30+50 TO 42+50

REGISTERED PROFESSIONAL ENGINEER ROBERT A. HIMES No. 45787 Exp. 12/31/10 CIVIL STATE OF CALIFORNIA

MARK THOMAS & COMPANY, INC.
7571 N REMINGTON AVENUE, SUITE 102
FRESNO, CALIFORNIA 93720
(559) 447-1938 FAX: (559) 447-8586
WWW.MARKTHOMAS.COM
MTCO JOB NUMBER: FN-09105

DATE: 05/26/2010
SCALE:
DRAWN BY: MB/KS/GG
CK'D BY: EAN
DATE CK'D:

Revisions	Checked By	Date Checked

SHEET NO. 11
L-3
OF 76 SHEETS

CAD USER: ksmith
PLOT DATE: Jun 02, 2010-08:12:07am
FILE NAME: RCB_L-1-L-7
PATH: V:\Ridgecrest - FN-09105 - Ridgecrest Blvd\CADD\Drawing\

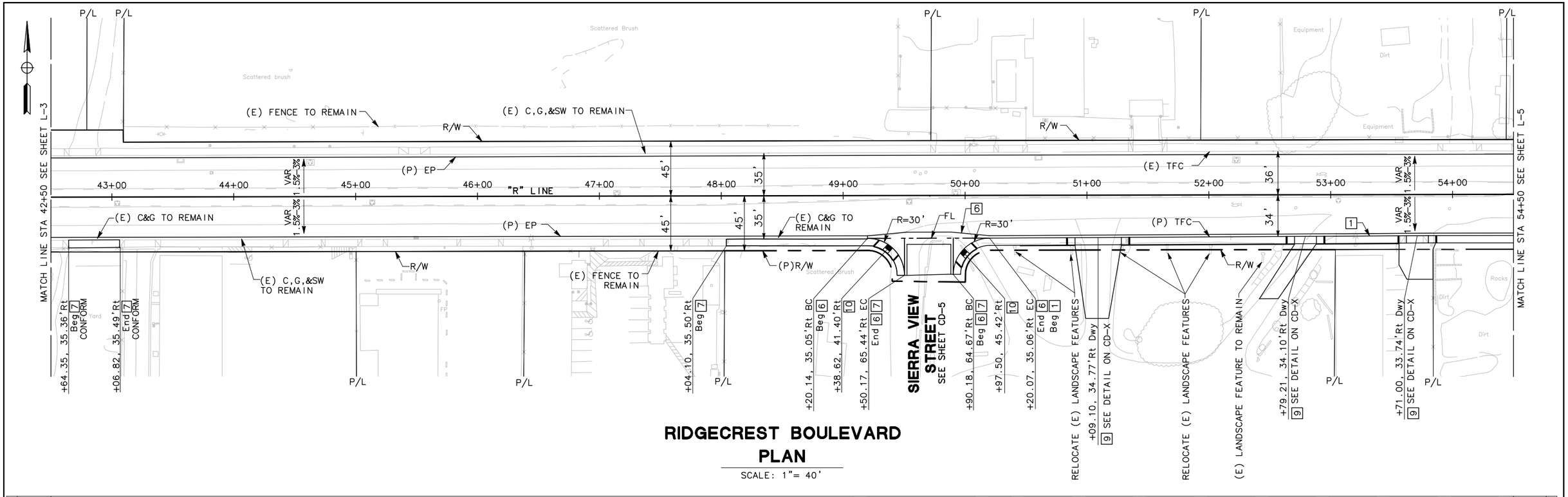

RIDGECREST BOULEVARD
PLAN

SCALE: 1"= 40'

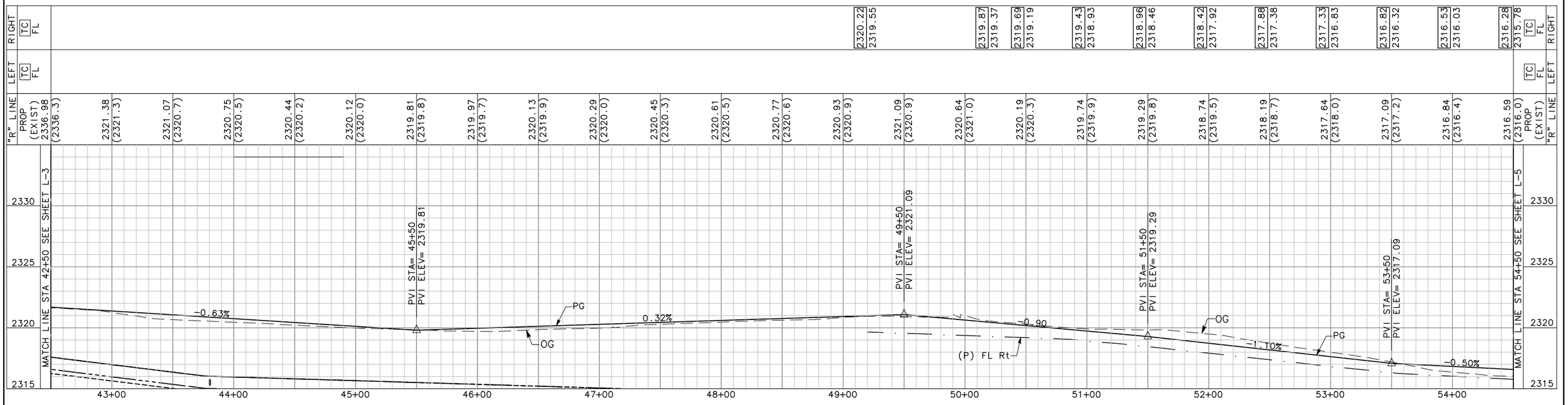

PROFILE

SCALE H: 1"= 40'
V: 1"= 4'

JOB NO.	CITY OF RIDGECREST W. RIDGECREST BOULEVARD RECONSTRUCTION LAYOUT 42+50 TO 54+50	ROBERT A. HIMES No. 45787 Exp. 12/31/10 CIVIL — REGISTERED PROFESSIONAL ENGINEER — STATE OF CALIFORNIA	MARK THOMAS & COMPANY, INC. 7571 N REMINGTON AVENUE, SUITE 102 FRESNO, CALIFORNIA 93720 (559) 447-1938 FAX: (559) 447-8586 WWW.MARKTHOMAS.COM MTCO JOB NUMBER: FN-09105	DATE: 05/26/2010 SCALE: DRAWN BY: MB/KS/CG CK'D BY: EAN DATE CK'D:

Revisions	Checked By	Date Checked

SHEET NO. 17

L-4

OF 76 SHEETS

FILE NAME: RCB_L-1-L-7
PLOT DATE: Jun 02, 2010-08:12:10am
CAD USER: ksmith
PATH: V:\Ridgecrest - FN-09105 - Ridgecrest Blvd\CADD\Drawing\

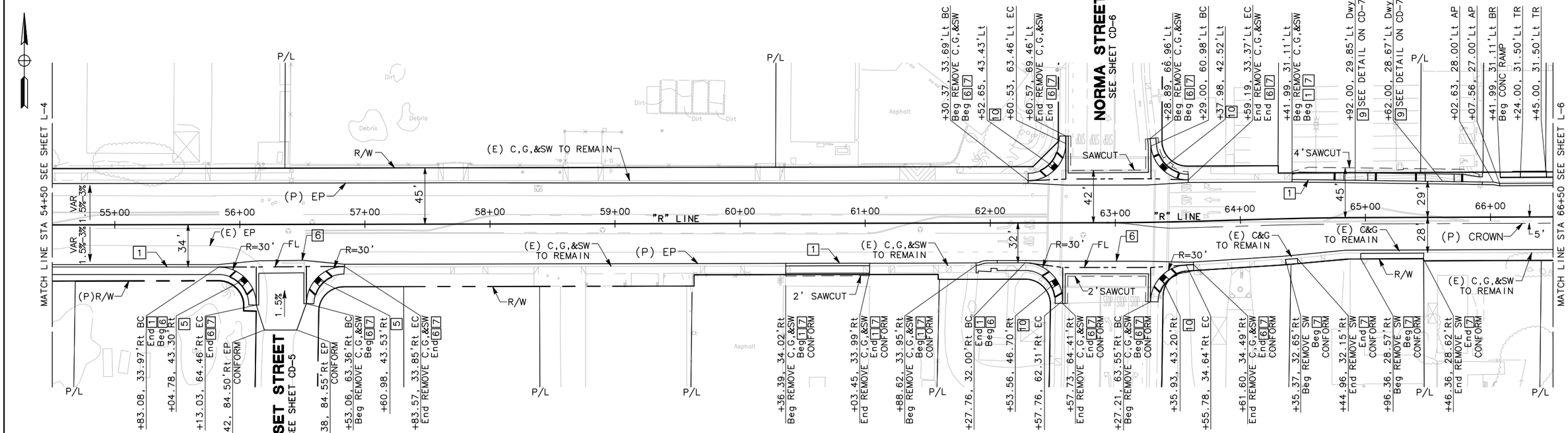

RIDGECREST BOULEVARD
PLAN
SCALE: 1"= 40'

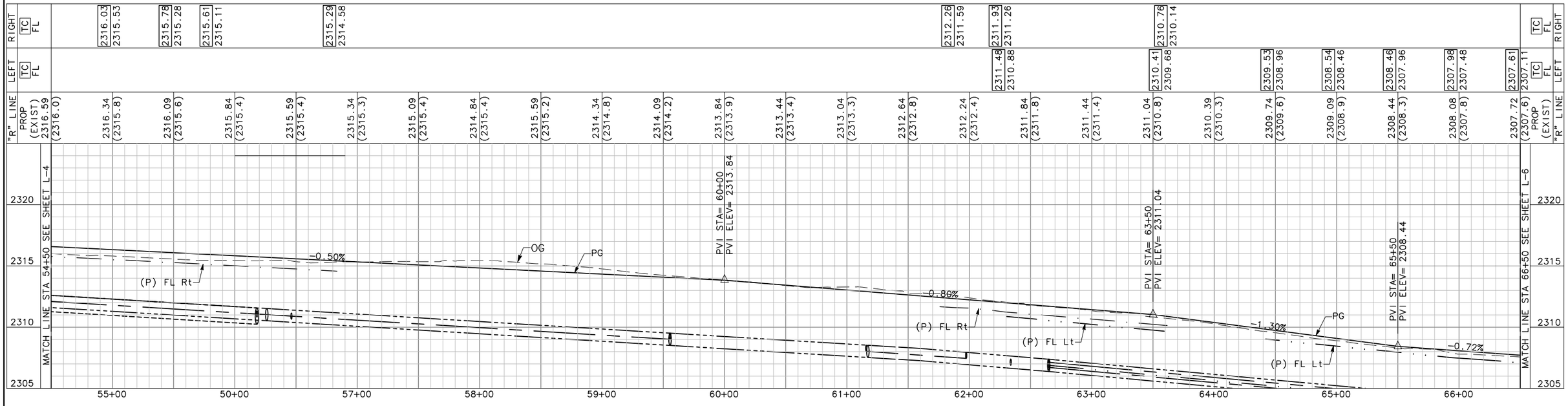

PROFILE
SCALE H: 1"= 40'
V: 1"= 4'

JOB NO.	CITY OF RIDGECREST W. RIDGECREST BOULEVARD RECONSTRUCTION LAYOUT 54+50 TO 66+50	ROBERT A. HIMES No. 45787 Exp. 12/31/10 CIVIL STATE OF CALIFORNIA	MARK THOMAS & COMPANY, INC. 7571 N REMINGTON AVENUE, SUITE 102 FRESNO, CALIFORNIA 93720 (559) 447-1938 FAX: (559) 447-8586 WWW.MARKTHOMAS.COM MTCO JOB NUMBER: FN-09105	DATE: 05/26/2010 SCALE: DRAWN BY: MB/KS/CG CK'D BY: EAN DATE CK'D:
XX-XX				

Revisions	Checked By	Date Checked

SHEET NO. 13
L-5
OF 76 SHEETS

PATH: V:\Ridgecrest - FN-09105 - Ridgecrest Blvd\CADD\Drawing\
FILE NAME: RCB_L-1-L-7
PLOT DATE: Jun 02, 2010-08:12:13am
CAD USER: ksmith

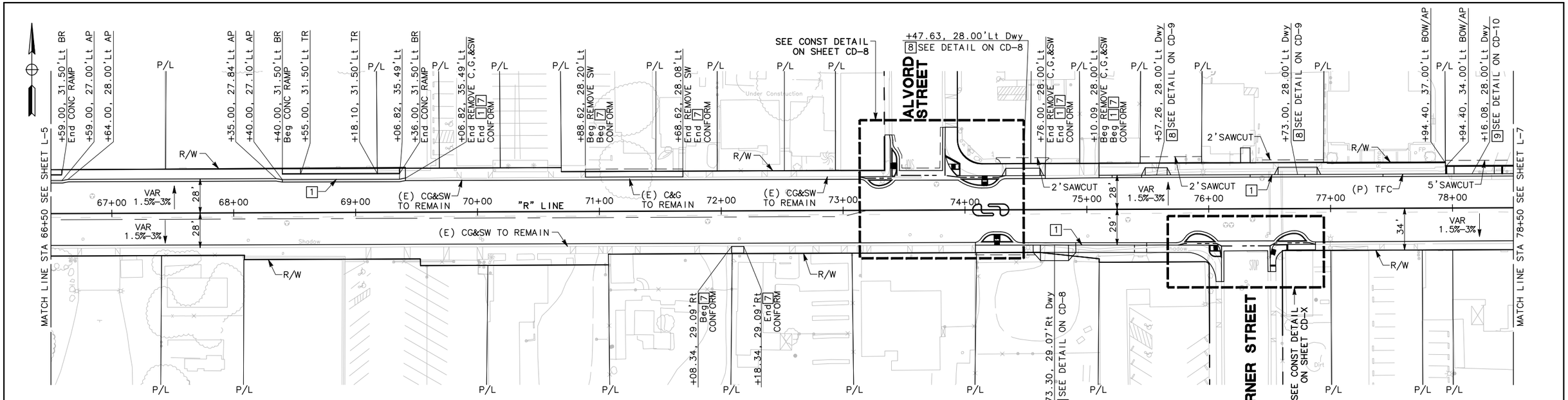

RIDGECREST BOULEVARD
PLAN

SCALE: 1"= 40'

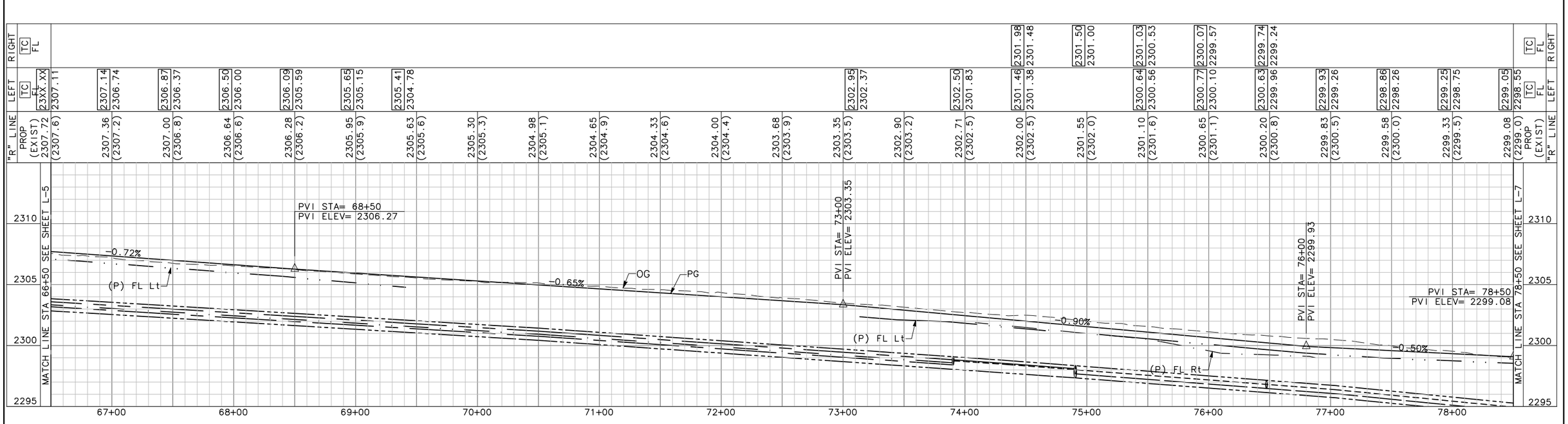

PROFILE

SCALE H: 1"= 40'
V: 1"= 4'

JOB NO.	CITY OF RIDGECREST W. RIDGECREST BOULEVARD RECONSTRUCTION LAYOUT 66+50 TO 78+50	ROBERT A. HIMES No. 45787 Exp. 12/31/10 CIVIL — REGISTERED PROFESSIONAL ENGINEER — STATE OF CALIFORNIA	MARK THOMAS & COMPANY, INC. 7571 N REMINGTON AVENUE, SUITE 102 FRESNO, CALIFORNIA 93720 (559) 447-1938 FAX: (559) 447-8586 WWW.MARKTHOMAS.COM MTCO JOB NUMBER: FN-09105	DATE: 05/26/2010 SCALE: DRAWN BY: MB/KS/CG CK'D BY: EAN DATE CK'D:

Revisions	Checked By	Date Checked

SHEET NO. 11

L-6

OF 76 SHEETS

PLOT DATE: Jun 02, 2010-08:12:16am CAD USER: ksmith
FILE NAME: RCB_L-1-L-7
PATH: V:\Ridgecrest - FN-09105 - Ridgecrest Blvd\CADD\Drawing\

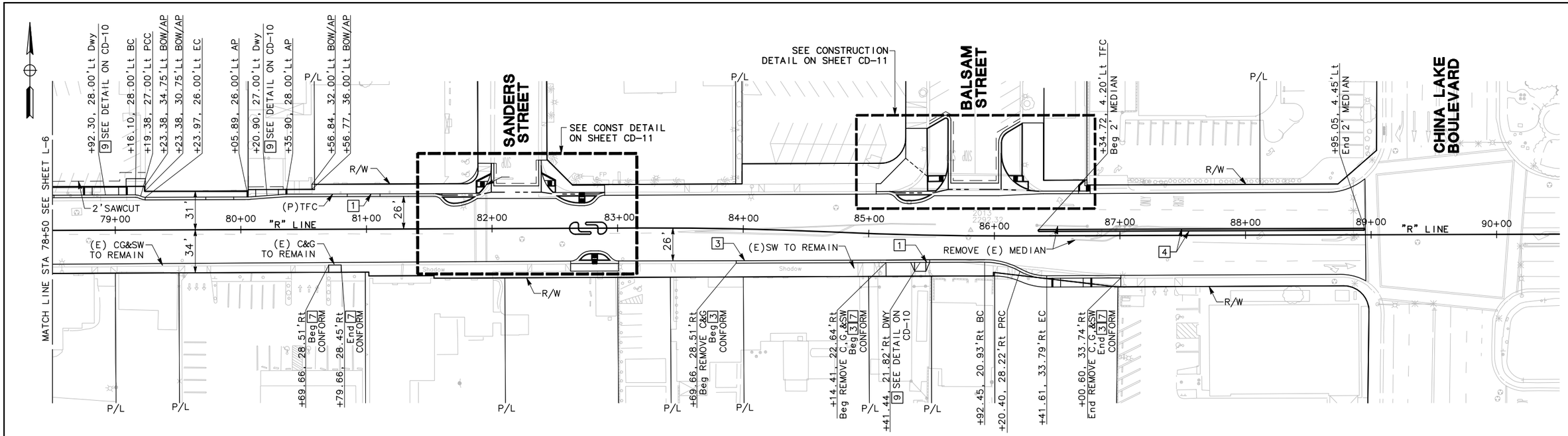

RIDGECREST BOULEVARD
PLAN

SCALE: 1"= 40'

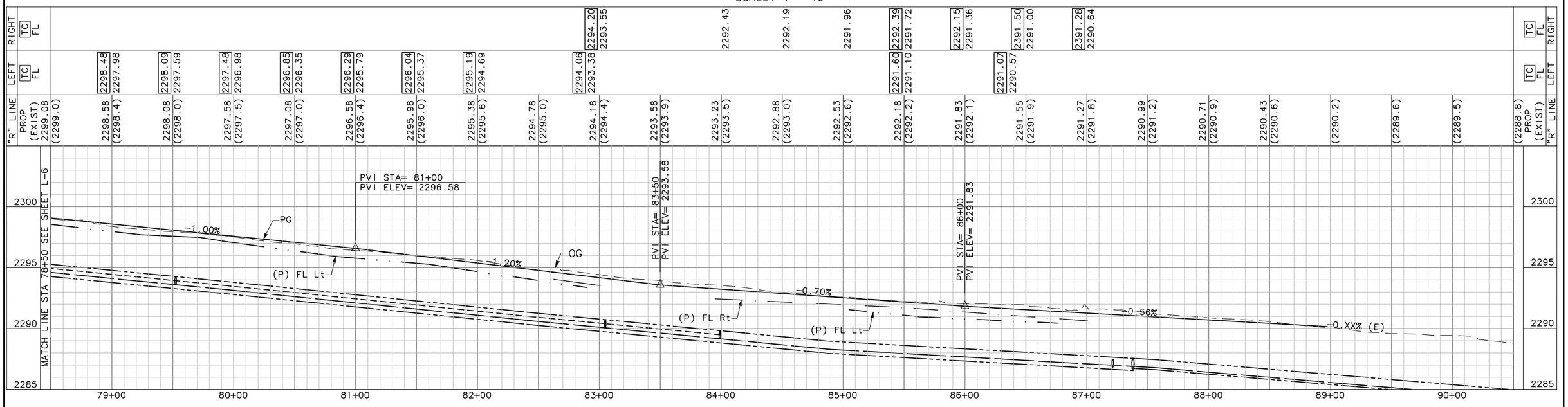

PROFILE

SCALE H: 1"= 40'
V: 1"= 4'

JOB NO.	CITY OF RIDGECREST W. RIDGECREST BOULEVARD RECONSTRUCTION LAYOUT 78+50 TO 90+50	ROBERT A. HIMES No. 45787 Exp. 12/31/10 CIVIL — REGISTERED PROFESSIONAL ENGINEER — STATE OF CALIFORNIA	MARK THOMAS & COMPANY, INC. 7571 N REMINGTON AVENUE, SUITE 102 FRESNO, CALIFORNIA 93720 (559) 447-1938 FAX: (559) 447-8586 WWW.MARKTHOMAS.COM MTCO JOB NUMBER: FN-09105	DATE: 05/26/2010 SCALE: DRAWN BY: MB/KS/CG CK'D BY: EAN DATE CK'D:

Revisions	Checked By	Date Checked

SHEET NO. 15

L-7

OF 76 SHEETS

CAD USER: ksmith
PLOT DATE: Jun 02, 2010-08:12:34am
FILE NAME: RCB_CD-1-CD-12
PATH: V:\Ridgecrest - FN-09105 - Ridgecrest Blvd\CADD\Drawing\

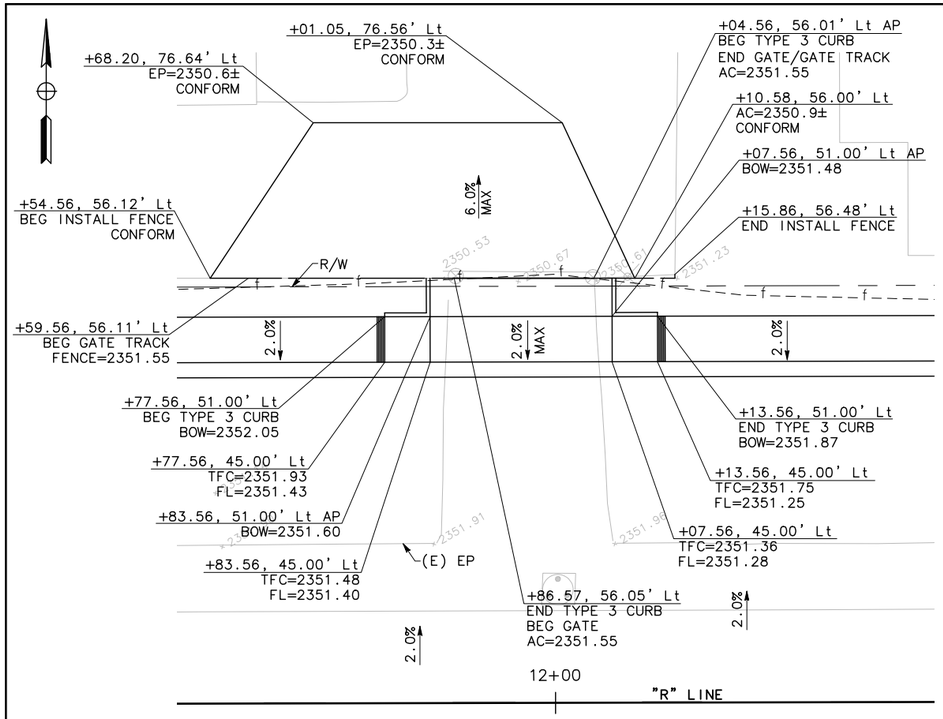

RIDGECREST BOULEVARD
STA 11+50 TO STA 12+50

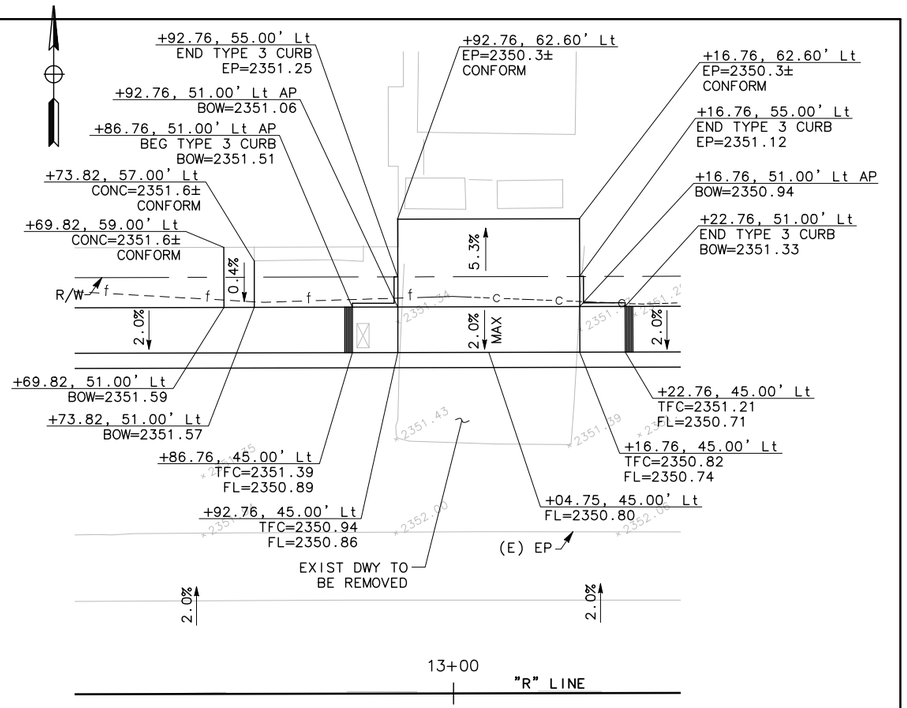

RIDGECREST BOULEVARD
STA 12+50 TO STA 13+30

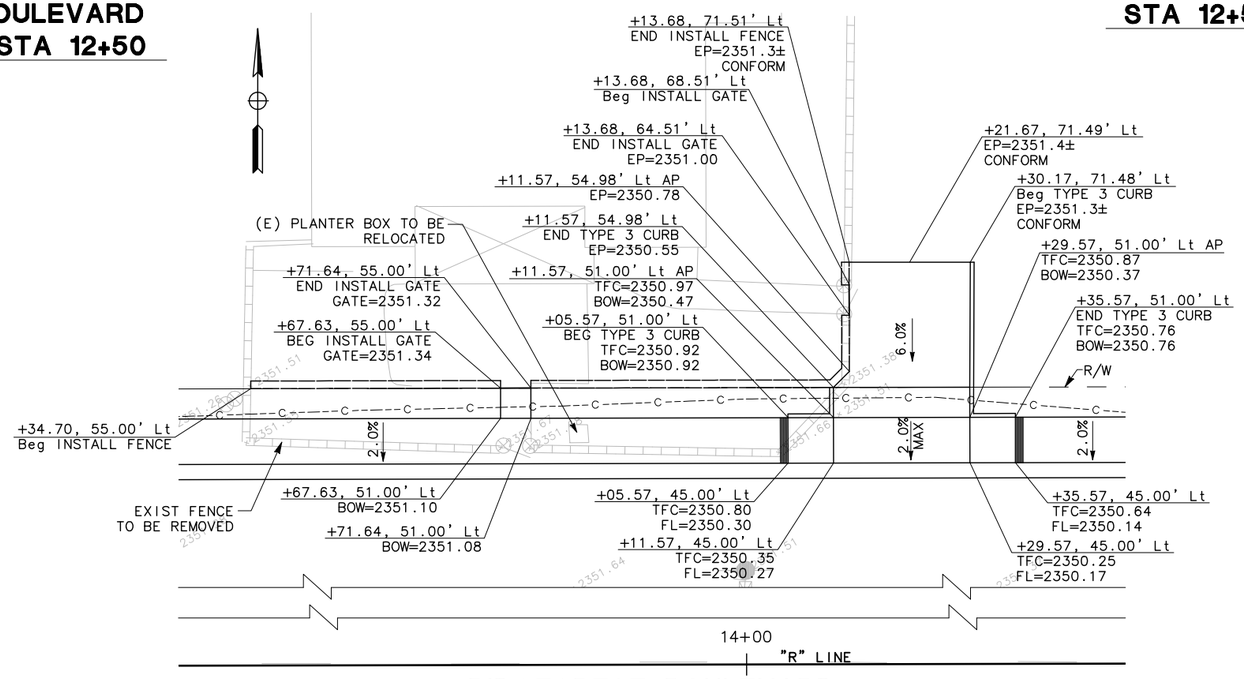

RIDGECREST BOULEVARD
STA 13+25 TO STA 14+50

JOB NO.	CITY OF RIDGECREST W. RIDGECREST BOULEVARD RECONSTRUCTION CONSTRUCTION DETAILS	REGISTERED PROFESSIONAL ENGINEER ROBERT A. HIMES No. 45787 Exp. 12/31/10 CIVIL STATE OF CALIFORNIA	MARK THOMAS & COMPANY, INC. 7571 N REMINGTON AVENUE, SUITE 102 FRESNO, CALIFORNIA 93720 (559) 447-1938 FAX: (559) 447-8586 WWW.MARKTHOMAS.COM MTCO JOB NUMBER: FN-09105	DATE: 05/26/2010 SCALE: 1"= 10' DRAWN BY: MB/KS/CC CK'D BY: EAN DATE CK'D:	Revisions	Checked By	Date Checked	SHEET NO. 16 CD-1 OF 76 SHEETS
XX-XX								

PLOT DATE: Jun 02, 2010-08:12:43am CAD USER: ksmith
FILE NAME: RCB_CD-1-CD-12
PATH: V:\Ridgecrest - FN-09105 - Ridgecrest Blvd\CADD\Drawing\

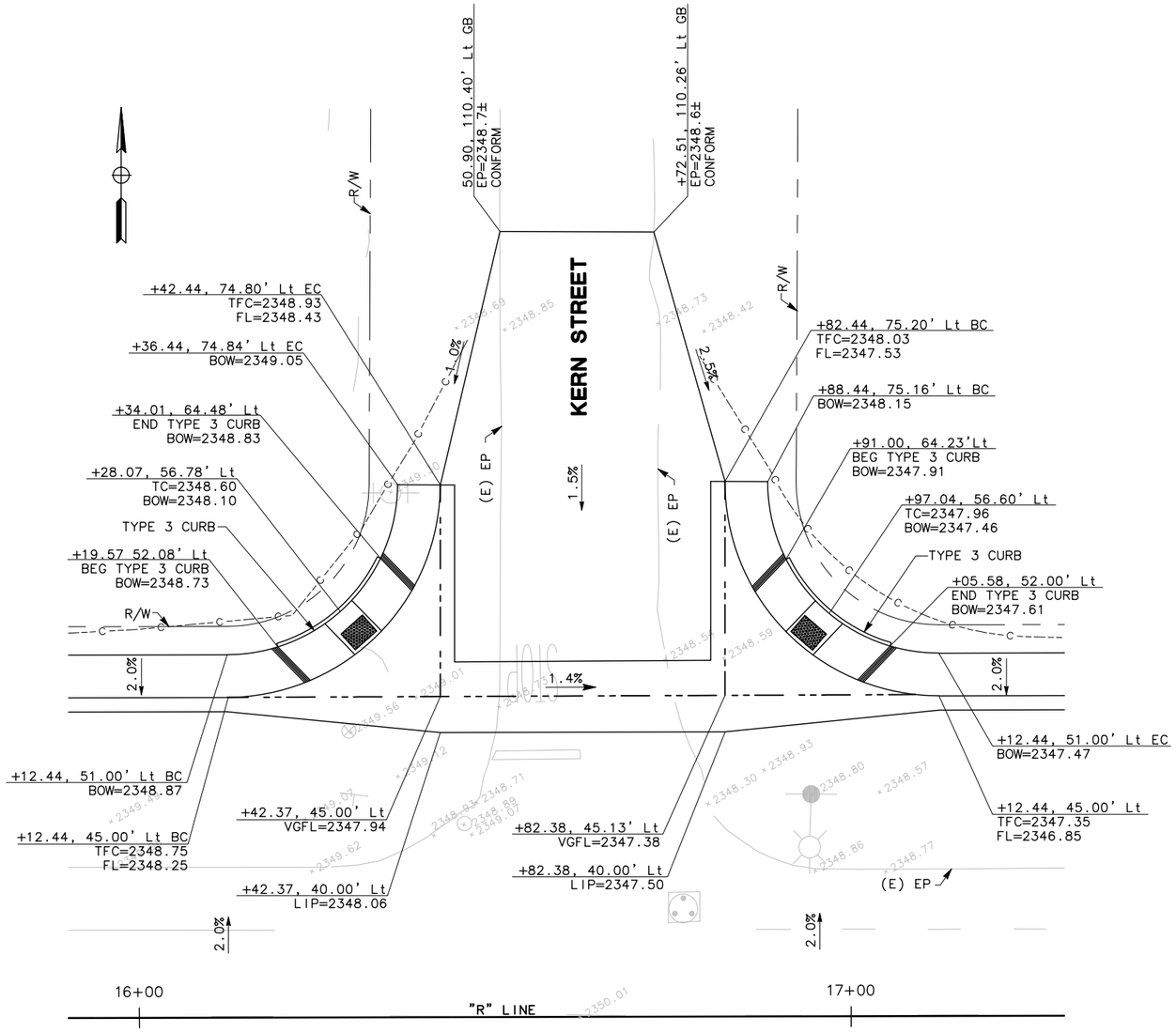

RIDGECREST BOULEVARD
STA 15+90 TO STA 17+30

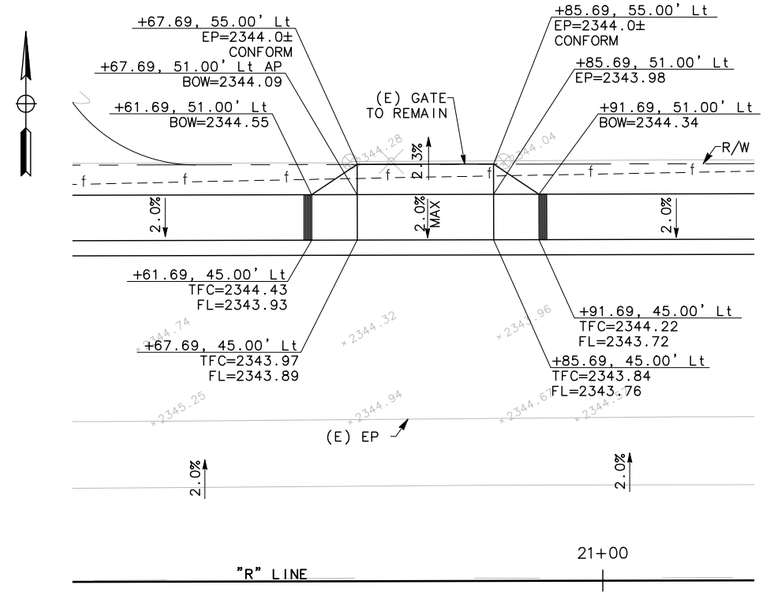

RIDGECREST BOULEVARD
STA 20+30 TO STA 21+20

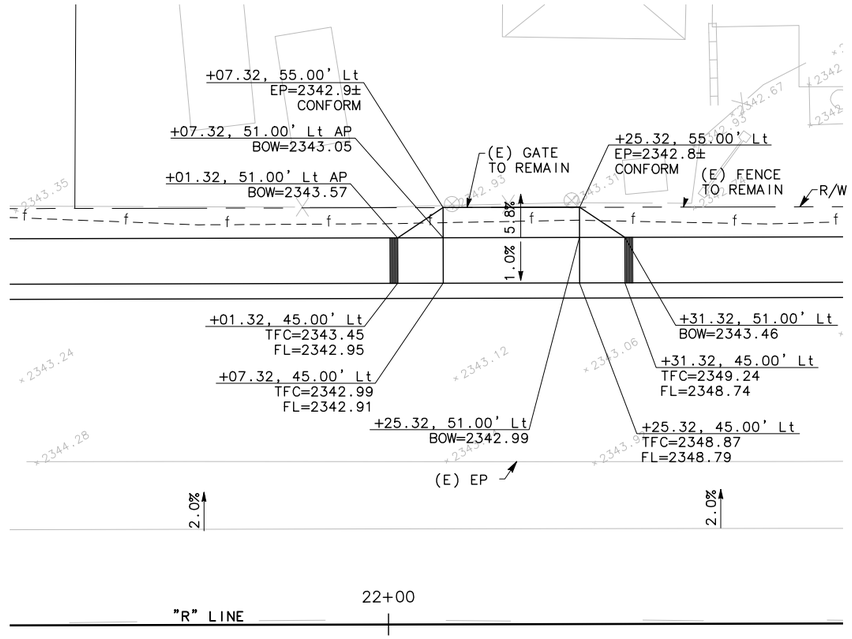

RIDGECREST BOULEVARD
STA 21+50 TO STA 22+60

JOB NO.	CITY OF RIDGECREST W. RIDGECREST BOULEVARD RECONSTRUCTION CONSTRUCTION DETAILS	ROBERT A. HIMES No. 45787 Exp. 12/31/10 CIVIL STATE OF CALIFORNIA	MARK THOMAS & COMPANY, INC. 7571 N REMINGTON AVENUE, SUITE 102 FRESNO, CALIFORNIA 93720 (559) 447-1938 FAX: (559) 447-8586 WWW.MARKTHOMAS.COM MTCO JOB NUMBER: FN-09105	DATE: 05/26/2010 SCALE: 1"= 10' DRAWN BY: MB/KS/CC CK'D BY: EAN DATE CK'D:	Revisions	Checked By	Date Checked	SHEET NO. 17 CD-2 OF 76 SHEETS
XX-XX								

PATH: V:\Ridgecrest - FN-09105 - Ridgecrest Blvd\CADD\Drawing\
FILE NAME: RCB_CD-1-CD-12
PLOT DATE: Jun 02, 2010-08:12:49am
CAD USER: ksmith

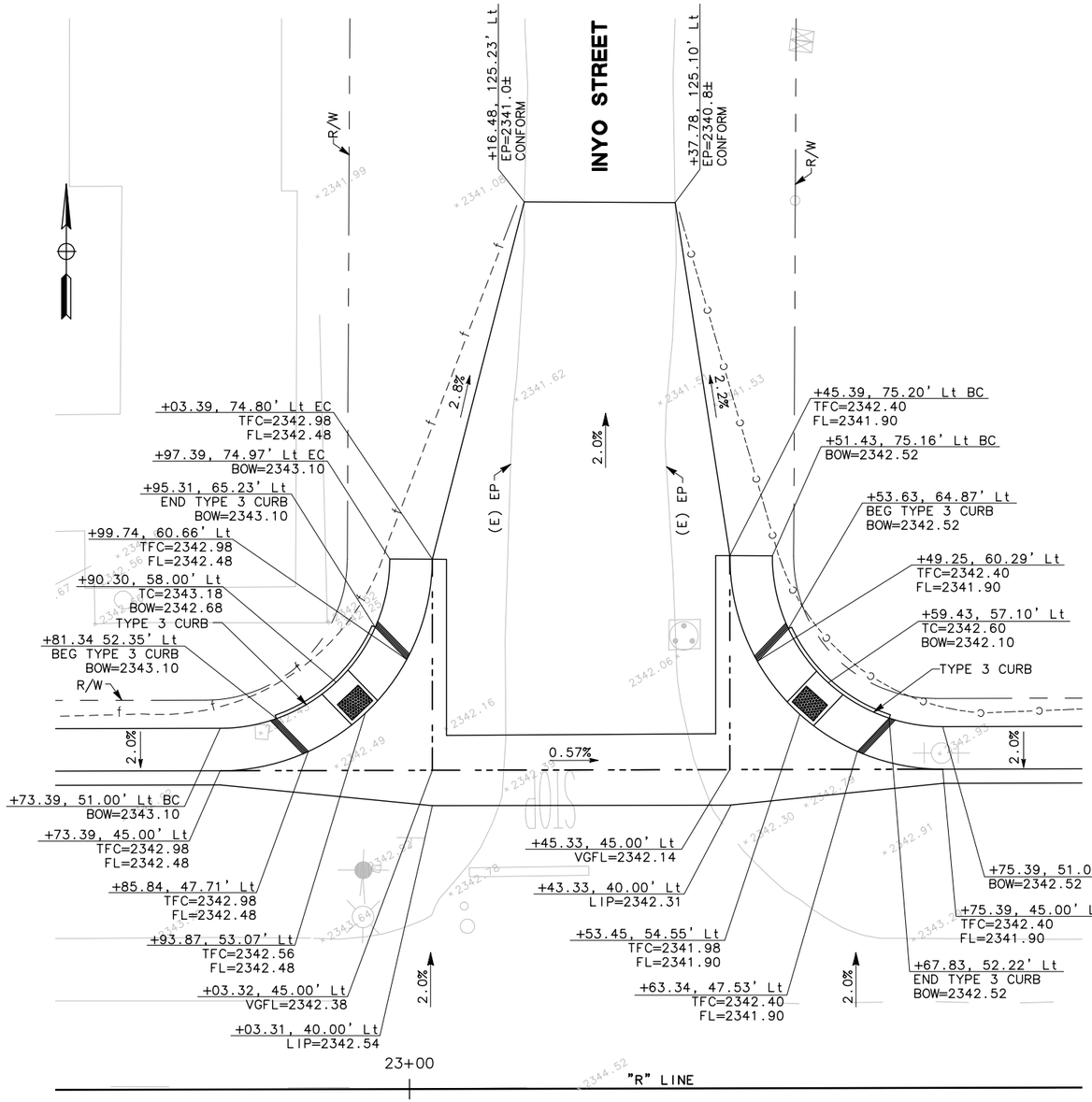

RIDGECREST BOULEVARD
STA 22+50 TO STA 23+95

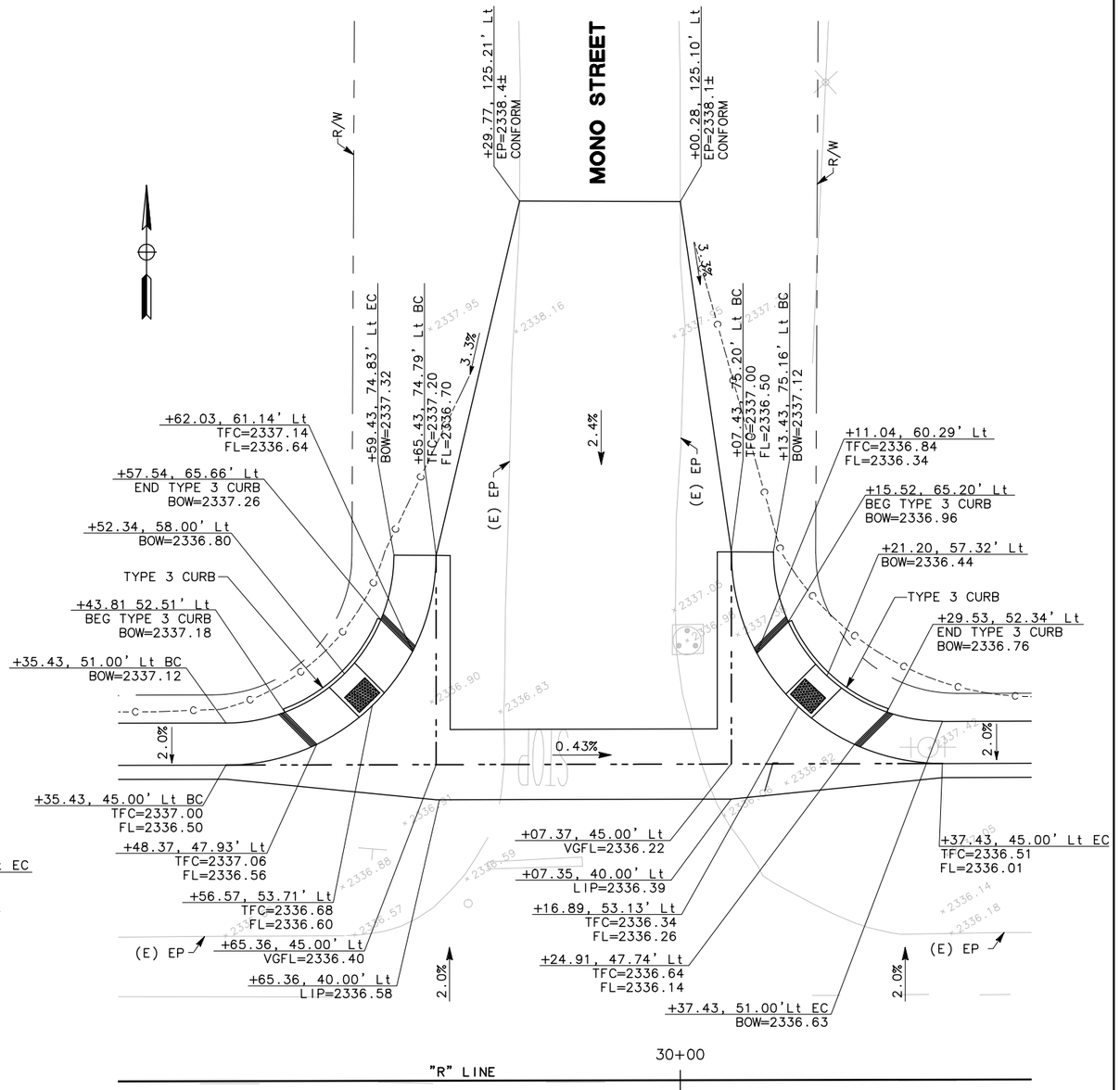

RIDGECREST BOULEVARD
STA 29+20 TO STA 30+50

JOB NO.	CITY OF RIDGECREST W. RIDGECREST BOULEVARD RECONSTRUCTION CONSTRUCTION DETAILS		MARK THOMAS & COMPANY, INC. 7571 N REMINGTON AVENUE, SUITE 102 FRESNO, CALIFORNIA 93720 (559) 447-1938 FAX: (559) 447-8586 WWW.MARKTHOMAS.COM MTCO JOB NUMBER: FN-09105	DATE: 05/26/2010 SCALE: 1"= 10' DRAWN BY: MB/KS/CG CK'D BY: EAN DATE CK'D:	Revisions / Checked By / Date Checked	SHEET NO. 18 CD-3 OF 76 SHEETS
XX-XX		ROBERT A. HIMES No. 45787 Exp. 12/31/10 CIVIL STATE OF CALIFORNIA				

PATH: V:\Ridgecrest - FN-09105 - Ridgecrest Blvd\CADD\Drawing\
FILE NAME: RCB_CD-1-CD-12
PLOT DATE: Jun 02, 2010-08:12:53am
CAD USER: ksmith

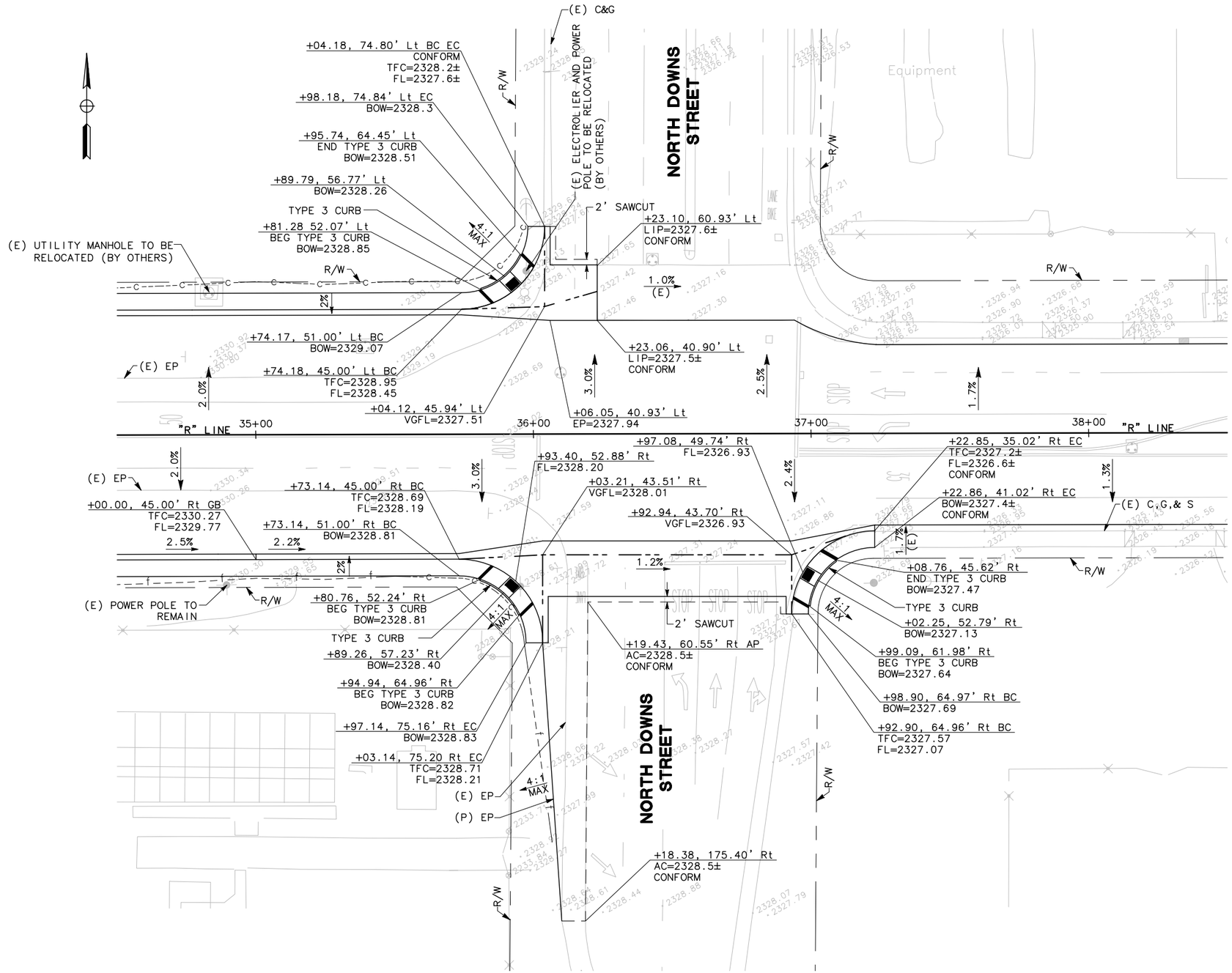

RIDGECREST BOULEVARD
STA 34+50 TO STA 38+50

JOB NO.							
XX-XX	**CITY OF RIDGECREST** **W. RIDGECREST BOULEVARD RECONSTRUCTION** **CONSTRUCTION DETAILS**	REGISTERED PROFESSIONAL ENGINEER ROBERT A. HIMES No. 45787 Exp. 12/31/10 CIVIL STATE OF CALIFORNIA	*MARK THOMAS & COMPANY, INC.* 7571 N REMINGTON AVENUE, SUITE 102 FRESNO, CALIFORNIA 93720 (559) 447-1938 FAX: (559) 447-8586 WWW.MARKTHOMAS.COM MTCO JOB NUMBER: FN-09105	DATE: 05/26/2010 SCALE: 1"= 20' DRAWN BY: MB/KS/GC CK'D BY: EAN DATE CK'D:	Revisions	Checked By	Date Checked	SHEET NO. 19 **CD-4** OF 76 SHEETS

PLOT DATE: Jun 02, 2010-08:12:59am CAD USER: ksmith
FILE NAME: RCB_CD-1-CD-12
PATH: V:\Ridgecrest - FN-09105 - Ridgecrest Blvd\CADD\Drawing\

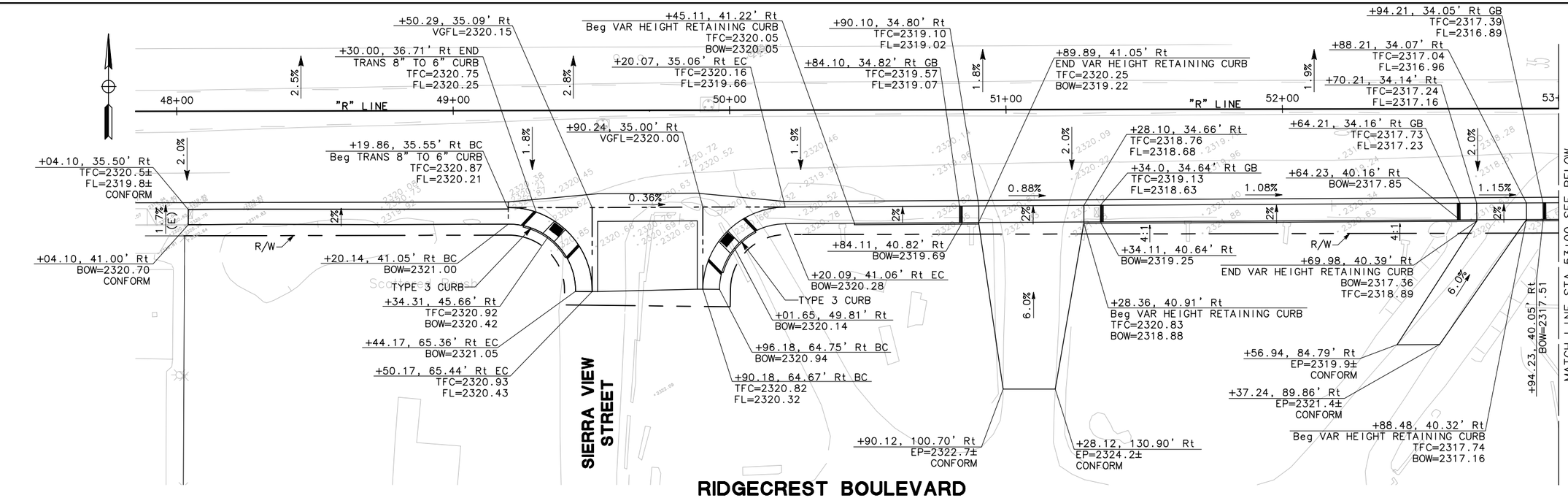

RIDGECREST BOULEVARD
STA 47+85 TO STA 53+00

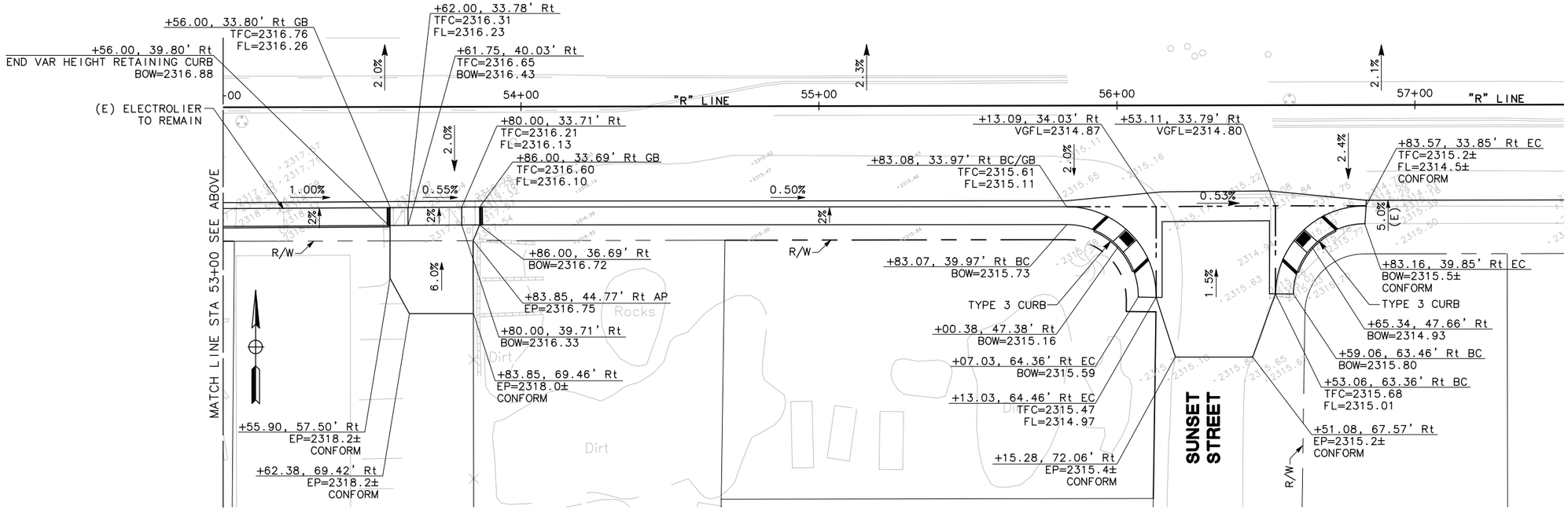

RIDGECREST BOULEVARD
STA 53+00 TO STA 57+50

JOB NO.	CITY OF RIDGECREST W. RIDGECREST BOULEVARD RECONSTRUCTION CONSTRUCTION DETAILS	REGISTERED PROFESSIONAL ENGINEER ROBERT A. HIMES No. 45787 Exp. 12/31/10 CIVIL STATE OF CALIFORNIA	MARK THOMAS & COMPANY, INC. 7571 N REMINGTON AVENUE, SUITE 102 FRESNO, CALIFORNIA 93720 (559) 447-1938 FAX: (559) 447-8586 WWW.MARKTHOMAS.COM MTCO JOB NUMBER: FN-09105	DATE: 05/26/2010 SCALE: 1"= 20' DRAWN BY: MB/KS/GC CK'D BY: EAN DATE CK'D:	Revisions	Checked By	Date Checked	SHEET NO. 20 CD-5 OF 76 SHEETS
XX-XX								

CAD USER: ksmith
PLOT DATE: Jun 02, 2010–08:13:02am
FILE NAME: RCB_CD-1-CD-12
PATH: V:\Ridgecrest - FN-09105 - Ridgecrest Blvd\CADD\Drawing\

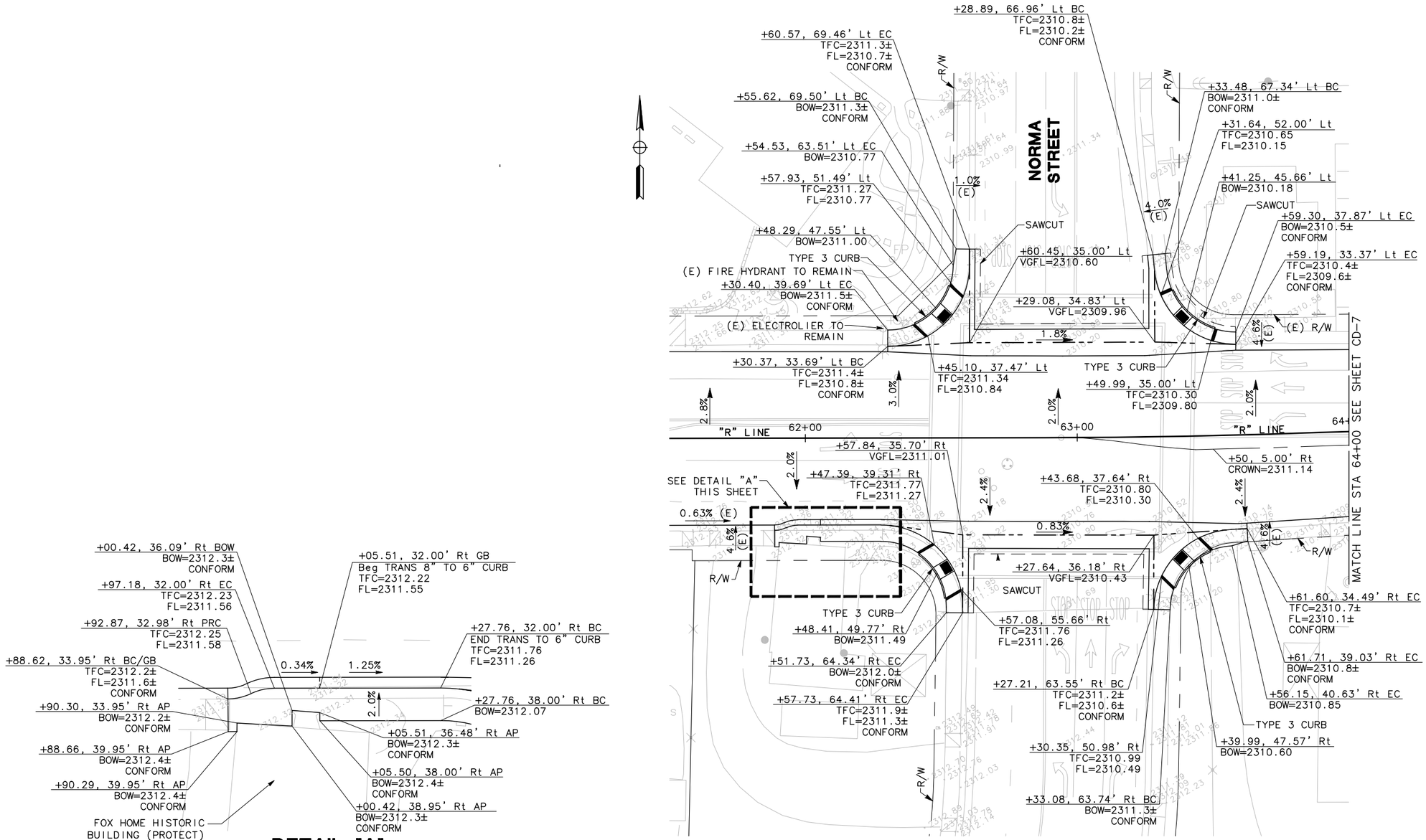

RIDGECREST BOULEVARD
STA 61+50 TO STA 64+00

SCALE: 1"=20'

DETAIL "A"

SCALE: 1"=10'

JOB NO.	CITY OF RIDGECREST W. RIDGECREST BOULEVARD RECONSTRUCTION CONSTRUCTION DETAILS	REGISTERED PROFESSIONAL ENGINEER ROBERT A. HIMES No. 45787 Exp. 12/31/10 CIVIL STATE OF CALIFORNIA	MARK THOMAS & COMPANY, INC. 7571 N REMINGTON AVENUE, SUITE 102 FRESNO, CALIFORNIA 93720 (559) 447-1938 FAX: (559) 447-8586 WWW.MARKTHOMAS.COM MTCO JOB NUMBER: FN-09105	DATE: 05/26/2010 SCALE: VARIES DRAWN BY: MB/KS/CG CK'D BY: EAN DATE CK'D:	Revisions	Checked By	Date Checked	SHEET NO. 21 CD-6 OF 76 SHEETS
XX-XX								

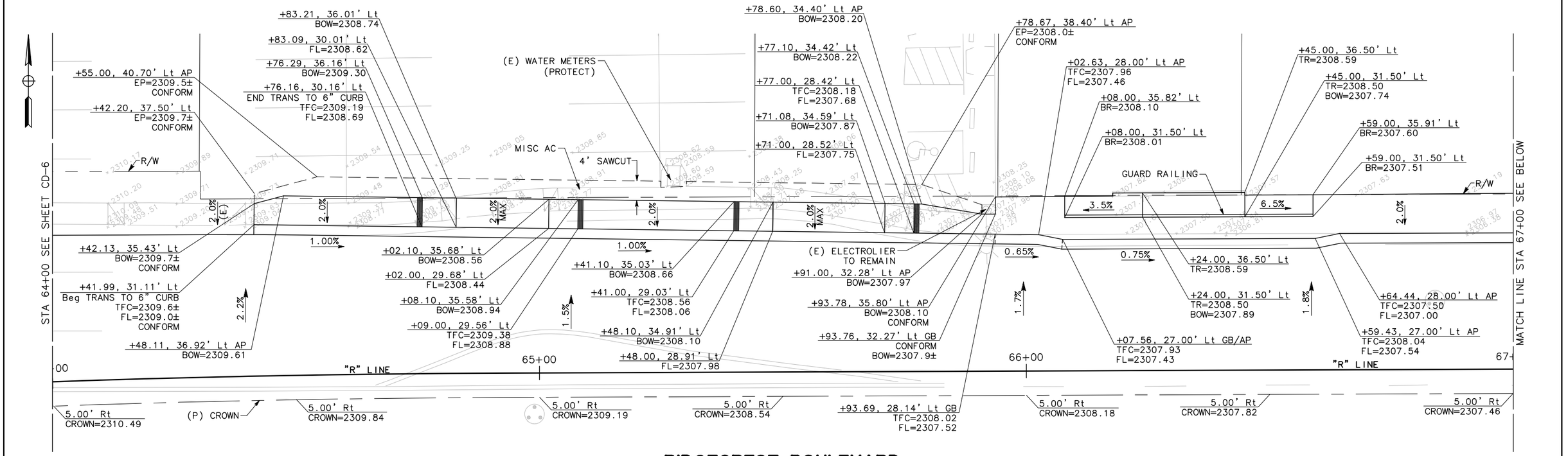

RIDGECREST BOULEVARD
STA 64+00 TO STA 67+00

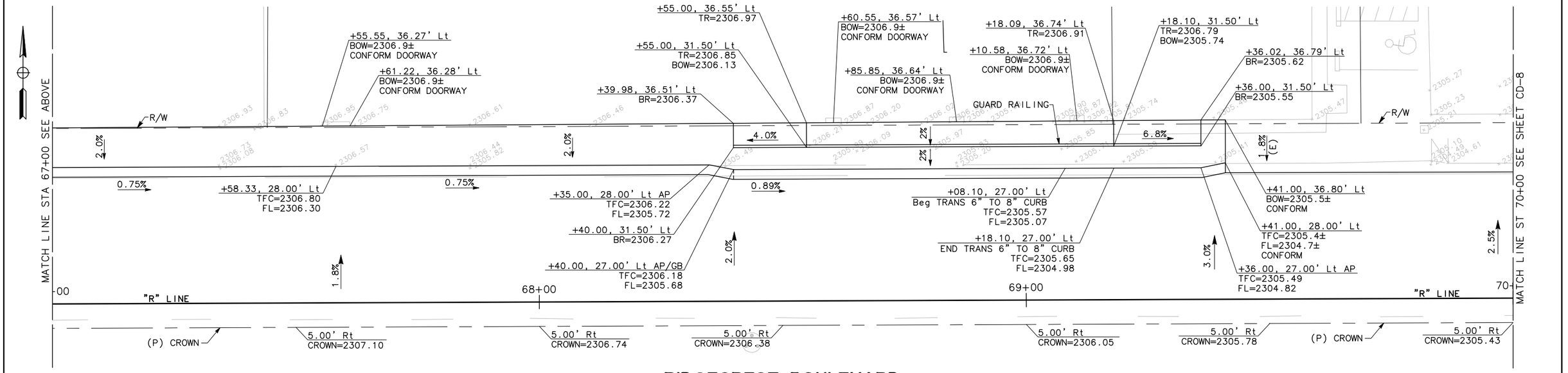

RIDGECREST BOULEVARD
STA 67+00 TO STA 70+00

JOB NO.	CITY OF RIDGECREST W. RIDGECREST BOULEVARD RECONSTRUCTION CONSTRUCTION DETAILS			DATE: 05/26/2010 SCALE: 1" = 10' DRAWN BY: MB/KS/CC CK'D BY: EAN DATE CK'D:	Revisions	Checked By	Date Checked	SHEET NO. 22 CD-7 OF 76 SHEETS
XX-XX		ROBERT A. HIMES No. 45787 Exp. 12/31/10 CIVIL STATE OF CALIFORNIA	MARK THOMAS & COMPANY, INC. 7571 N REMINGTON AVENUE, SUITE 102 FRESNO, CALIFORNIA 93720 (559) 447-1938 FAX: (559) 447-8586 WWW.MARKTHOMAS.COM MTCO JOB NUMBER: FN-09105					

FILE NAME: RCB_CD-1-CD-12
PLOT DATE: Jun 02, 2010-08:13:08am
CAD USER: ksmith
PATH: V:\Ridgecrest - FN-09105 - Ridgecrest Blvd\CADD\Drawing\

CAD USER: ksmith
PLOT DATE: Jun 02, 2010-08:13:11am
FILE NAME: RCB_CD-1-CD-12
PATH: V:\Ridgecrest - FN-09105 - Ridgecrest Blvd\CADD\Drawing\

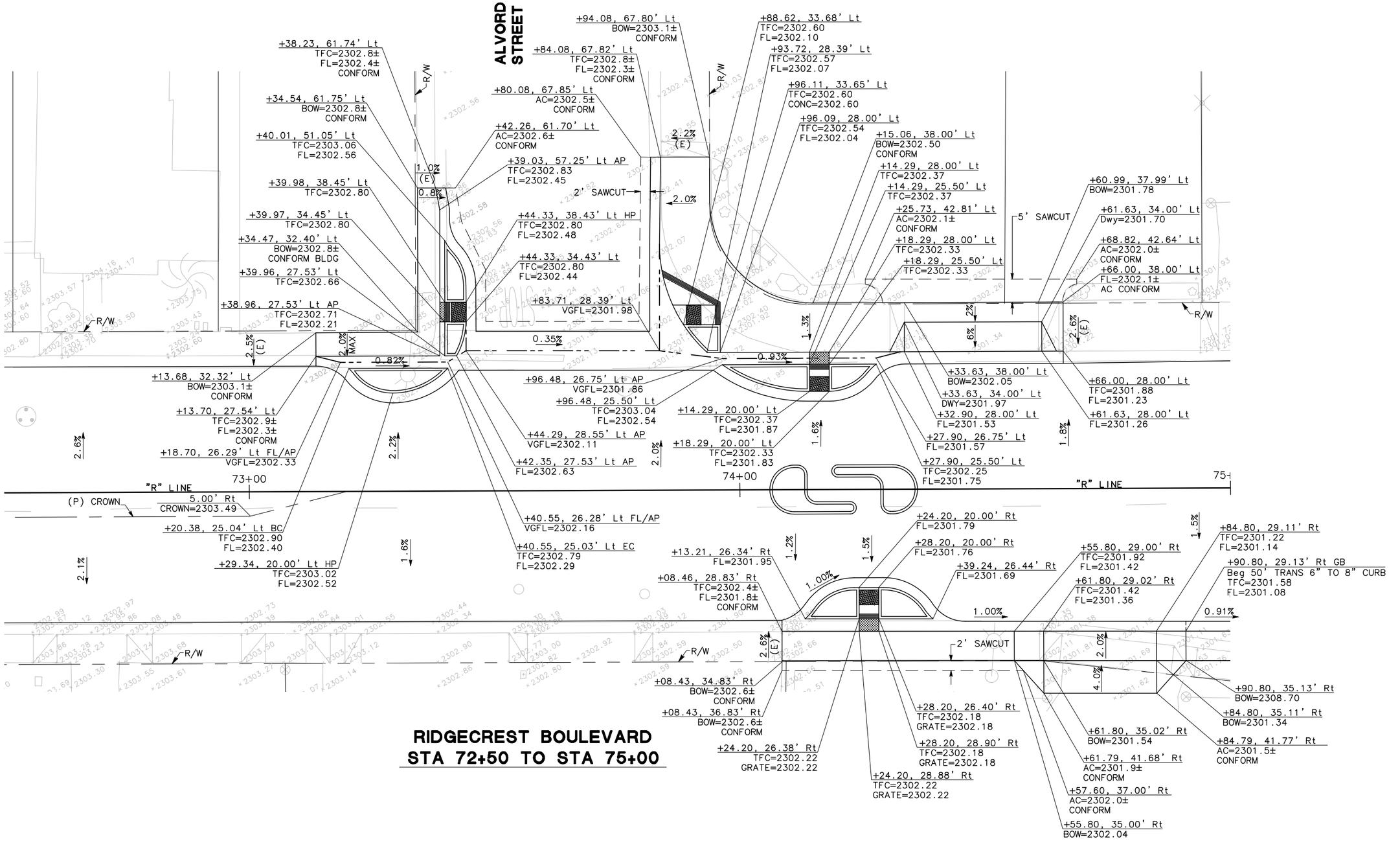

RIDGECREST BOULEVARD
STA 72+50 TO STA 75+00

JOB NO.	CITY OF RIDGECREST W. RIDGECREST BOULEVARD RECONSTRUCTION CONSTRUCTION DETAILS	ROBERT A. HIMES No. 45787 Exp. 12/31/10 CIVIL — REGISTERED PROFESSIONAL ENGINEER — STATE OF CALIFORNIA	MARK THOMAS & COMPANY, INC. 7571 N REMINGTON AVENUE, SUITE 102 FRESNO, CALIFORNIA 93720 (559) 447-1938 FAX: (559) 447-8586 WWW.MARKTHOMAS.COM MTCO JOB NUMBER: FN-09105	DATE: 05/26/2010 SCALE: 1"= 10' DRAWN BY: MB/KS/CG CK'D BY: EAN DATE CK'D:	Revisions	Checked By	Date Checked	SHEET NO. 23 CD-8 OF 76 SHEETS
XX-XX								

CAD USER: ksmith
PLOT DATE: Jun 02, 2010-08:13:15am
FILE NAME: RCB_CD-1-CD-12
PATH: V:\Ridgecrest - FN-09105 - Ridgecrest Blvd\CADD\Drawing\

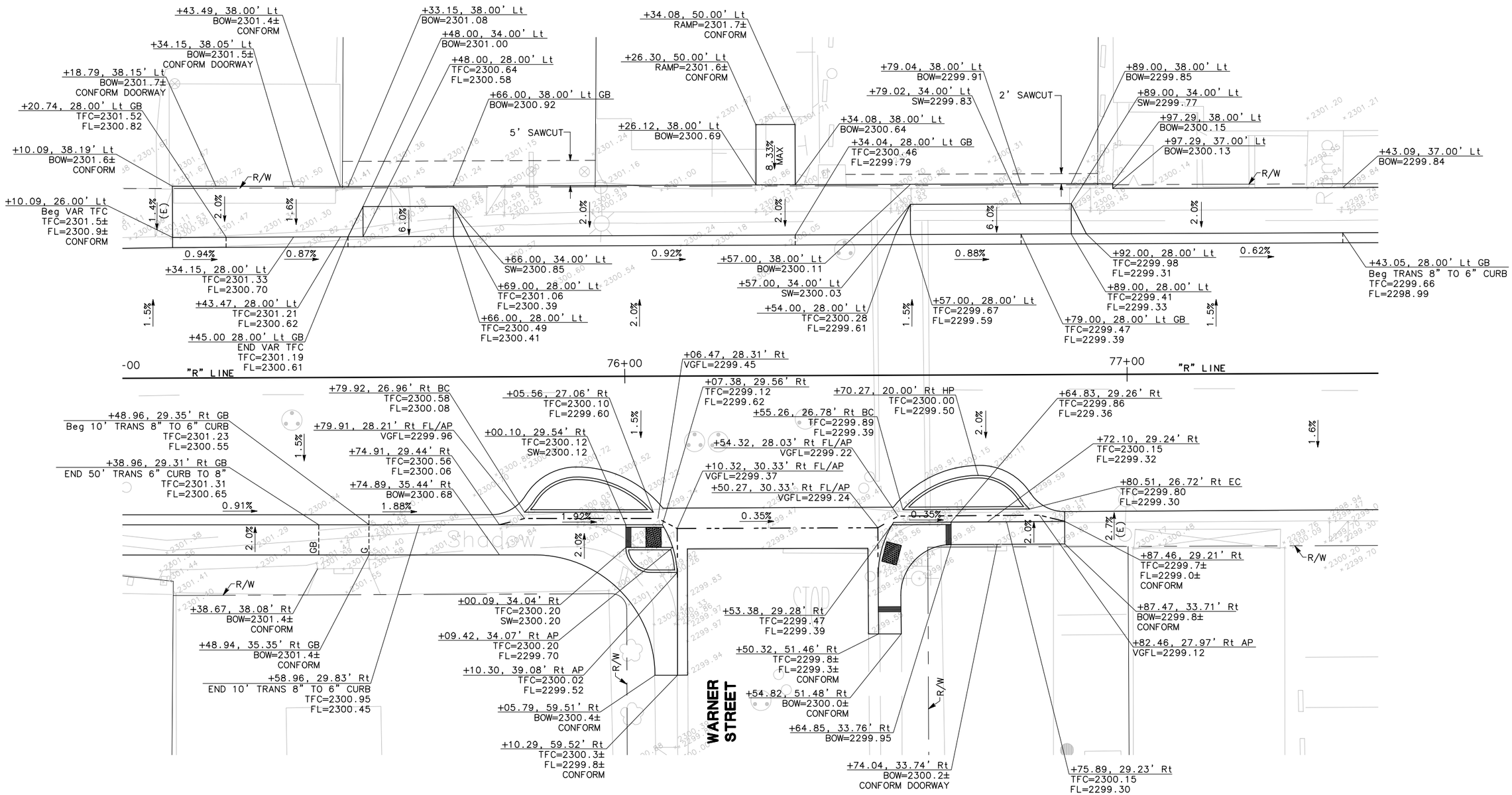

RIDGECREST BOULEVARD
STA 75+00 TO STA 77+50

JOB NO.	CITY OF RIDGECREST W. RIDGECREST BOULEVARD RECONSTRUCTION CONSTRUCTION DETAILS	REGISTERED PROFESSIONAL ENGINEER ROBERT A. HIMES No. 45787 Exp. 12/31/10 CIVIL STATE OF CALIFORNIA	MARK THOMAS & COMPANY, INC. 7571 N REMINGTON AVENUE, SUITE 102 FRESNO, CALIFORNIA 93720 (559) 447-1938 FAX: (559) 447-8586 WWW.MARKTHOMAS.COM MTCO JOB NUMBER: FN-09105	DATE: 05/26/2010 SCALE: 1" = 20' DRAWN BY: MB/KS/CC CK'D BY: EAN DATE CK'D:	Revisions	Checked By	Date Checked	SHEET NO. 24 CD-9 OF 76 SHEETS
XX-XX								

CAD USER: ksmith
PLOT DATE: Jun 02, 2010–08:13:19am
FILE NAME: RCB_CD-1-CD-12
PATH: V:\Ridgecrest - FN-09105 - Ridgecrest Blvd\CADD\Drawing\

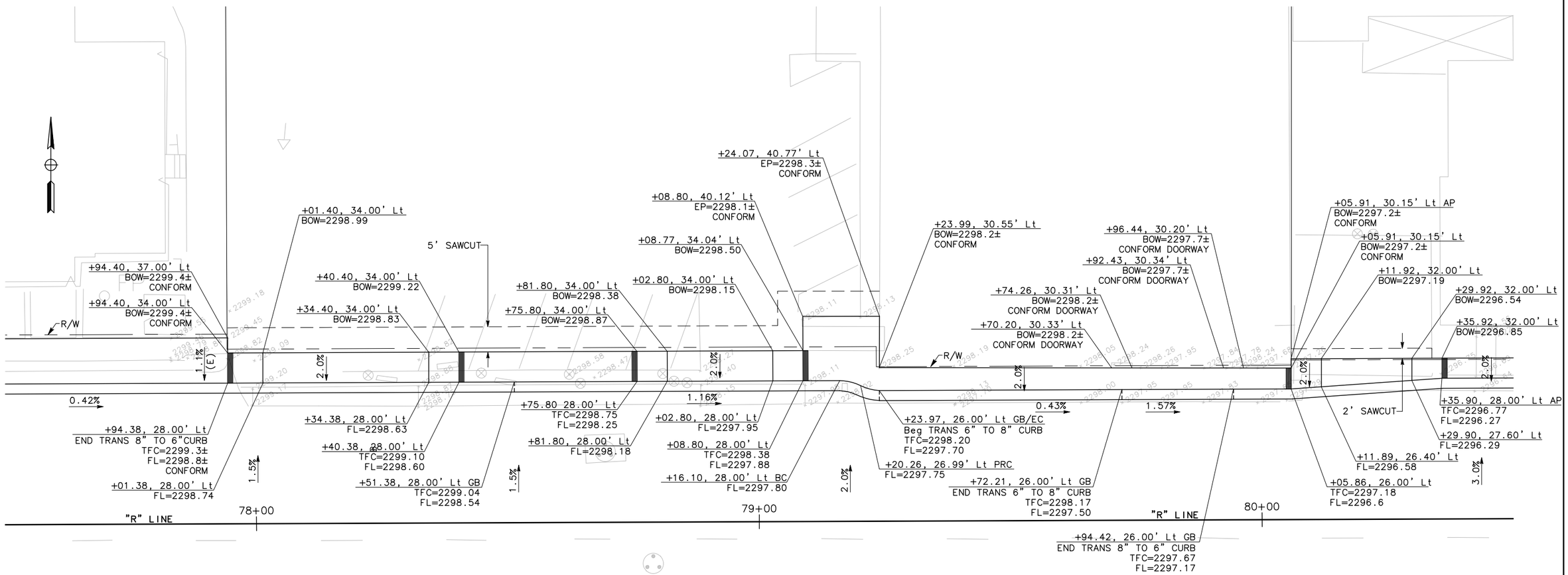

RIDGECREST BOULEVARD
STA 77+50 TO STA 80+50

JOB NO.	CITY OF RIDGECREST W. RIDGECREST BOULEVARD RECONSTRUCTION CONSTRUCTION DETAILS		MARK THOMAS & COMPANY, INC. 7571 N REMINGTON AVENUE, SUITE 102 FRESNO, CALIFORNIA 93720 (559) 447-1938 FAX: (559) 447-8586 WWW.MARKTHOMAS.COM MTCO JOB NUMBER: FN-09105	DATE: 05/26/2010 SCALE: 1" = 20' DRAWN BY: MB/KS/CG CK'D BY: EAN DATE CK'D:	Revisions / Checked By / Date Checked	SHEET NO. 25 CD-10 OF 76 SHEETS

Registered Professional Engineer — Robert A. Himes — No. 45787 — Exp. 12/31/10 — Civil — State of California